SERVICE MANUAL

MODEL	DEST.	CHASSIS NO.
PFM-42B1	US/CND/E	
PFM-42B1E	AEP	

MODEL	DEST.	CHASSIS NO.
BKM-B10	AEP	
RM-42B		

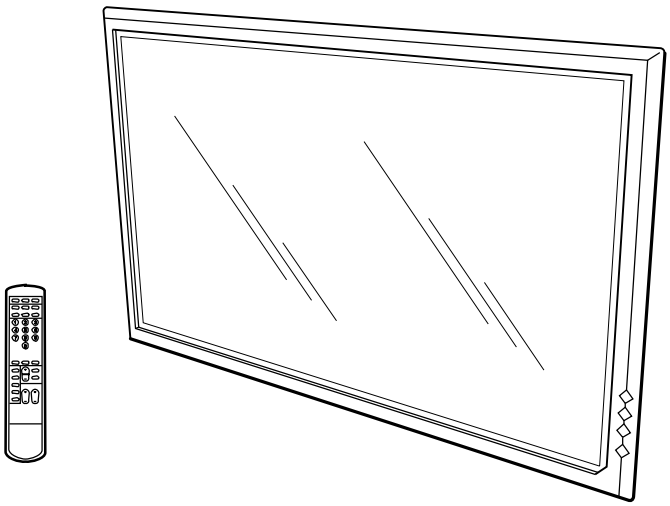

FLAT PANEL MONITOR

SONY

⚠警告

このマニュアルは，サービス専用です。
お客様が，このマニュアルに記載された設置や保守，点検，修理などを行うと感電や火災，人身事故につながることがあります。
危険をさけるため，サービストレーニングを受けた技術者のみご使用ください。

⚠ WARNING

This manual is intended for qualified service personnel only.
To reduce the risk of electric shock, fire or injury, do not perform any servicing other than that contained in the operating instructions unless you are qualified to do so. Refer all servicing to qualified service personnel.

⚠ WARNUNG

Die Anleitung ist nur für qualifiziertes Fachpersonal bestimmt.
Alle Wartungsarbeiten dürfen nur von qualifiziertem Fachpersonal ausgeführt werden. Um die Gefahr eines elektrischen Schlages, Feuergefahr und Verletzungen zu vermeiden, sind bei Wartungsarbeiten strikt die Angaben in der Anleitung zu befolgen. Andere als die angegeben Wartungsarbeiten dürfen nur von Personen ausgeführt werden, die eine spezielle Befähigung dazu besitzen.

⚠ AVERTISSEMENT

Ce manual est destiné uniquement aux personnes compétentes en charge de l'entretien. Afin de réduire les risques de décharge électrique, d'incendie ou de blessure n'effectuer que les réparations indiquées dans le mode d'emploi à moins d'être qualifié pour en effectuer d'autres. Pour toute réparation faire appel à une personne compétente uniquement.

WARNING!!

AN INSULATED TRANSFORMER SHOULD BE USED DURING ANY SERVICE TO AVOID POSSIBLE SHOCK HAZARD, BECAUSE OF LIVE CHASSIS.
THE CHASSIS OF THIS RECEIVER IS DIRECTLY CONNECTED TO THE AC POWER LINE.

SAFETY-RELATED COMPONENT WARNING !!

COMPONENTS IDENTIFIED BY A ⚠ MARK ON THE SCHEMATIC DIAGRAMS, EXPLODED VIEWS AND IN THE PARTS LIST ARE CRITICAL TO SAFE OPERATION. REPLACE THESE COMPONENTS WITH SONY PARTS WHOSE PART NUMBERS APPEAR AS SHOWN IN THIS MANUAL OR IN SUPPLEMENTS PUBLISHED BY SONY.

ATTENTION!!

AFIN D'ÉVITER TOUT RISQUE D'ÉLECTROCUTION PROVENANT D'UN CHÂSSIS SOUS TENSION, UN TRANSFORMATEUR D'ISOLEMENT DOIT ETRE UTILISÉ LORS DE TOUT DÉPANNAGE.
LE CHÂSSIS DE CE RÉCEPTEUR EST DIRECTEMENT RACCORDÉ Á L'ALIMENTATION SECTEUR.

ATTENTION AUX COMPOSANTS RELATIFS Á LA SÉCURITÉ!!

LES COMPOSANTS IDENTIFIÉS PAR UNE MAPQUE ⚠ SUR LES SCHÉMAS DE PRINCIPE, LES VUES EXPLOSÉES ET LES LISTES DE PIECES SONT D'UNE IMPORTANCE CRITIQUE POUR LA SÉCURITÉ DU FONCTIONNEMENT. NE LES REMPLACER QUE PAR DES COMPOSANTS SONY DONT LE NUMÉRO DE PIÈCE EST INDIQUÉ DANS LE PRÉSENT MANUEL OU DANS DES SUPPLÉMENTS PUBLIÉS PAR SONY.

For the customers in the Netherlands
Voor de klanten in Nederland

Dit apparaat bevat een CR2025 batterij voor memory back-up.

Raadpleeg uw leverancier over de verwijdering van de batterij op het moment dat u het apparaat bij einde levensduur afdankt.

Gooi de batterij niet weg. maar lever hem in als KCA.

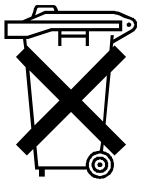

Bij dit product zijn batterijen geleverd. Wanneer deze leeg zijn, moet u ze niet weggooien maar inleveren als KCA.

For the customers in the Netherlands
Voor de klanten in Nederland

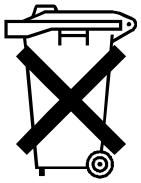

Bij dit product zijn batterijen geleverd. Wanneer deze leeg zijn, moet u ze niet weggooien maar inleveren als KCA.

Für Kunden in Deutschland

Entsorgungshinweis: Bitte werfen Sie nur entladene Batterien in die Sammelboxen beim Handel oder den Kommunen. Entladen sind Batterien in der Regel dann, wenn das Gerät abschaltet und signalisiert “Batterie leer” oder nach längerer Gebrauchsdauer der Batterien “nicht mehr einwandfrei funktioniert”. Um sicherzugehen, kleben Sie die Batteriepole z.B. mit einem Klebestreifen ab oder geben Sie die Batterien einzeln in einen Plastikbeutel.

CAUTION

Danger of explosion if battery is incorrectly replaced.

Replace only with the same or equivalent type recommended by the manufacturer.
Dispose of used batteries according to the manufacturer's instructions.

ADVARSEL

Lithiumbatteri - Eksplosjonsfare.
Ved utskifting benyttes kun batteri som anbefalt av apparatfabrikanten.
Brukt batteri returneres apparatleverandøren.

Vorsicht!

Explosionsgefahr bei unsachgemäßem Austausch der Batterie.

Ersatz nur durch denselben oder einen vom Hersteller empfohlenen ähnlichen Typ. Entsorgung gebrauchter Batterien nach Angaben des Herstellers.

VARNING

Explosionsfara vid felaktigt batteribyte.
Använd samma batterityp eller en likvärdig typ som rekommenderas av apparattillverkaren.
Kassera använt batteri enligt gällande föreskrifter.

ATTENTION

Il y a danger d'explosion s'il y a remplacement incorrect de la batterie.

Remplacer uniquement avec une batterie du même type ou d'un type équivalent recommandé par le constructeur.
Mettre au rebut les batteries usagées conformément aux instructions du fabricant.

VAROITUS

Paristo voi räjähtää jos se on virheellisesti asennettu.
Vaihda paristo ainoastaan laitevalmistajan suosittelemaan tyyppiin.
Hävitä käytetty paristo valmistajan ohjeiden mukaisesti.

ADVARSEL!

Lithiumbatteri-Eksplosionsfare ved fejlagtig håndtering.
Udskiftning må kun ske med batteri af samme fabrikat og type.
Levér det brugte batteri tilbage til leverandøren.

Table of Contents

1. Operating Instructions 1-1

2. Service Informations

2-1. Board Layout 2-1
2-2. Disassembly 2-2
2-2-1. QA Board (BKM-B10) Removal 2-2
2-2-2. Rear Cover Assy Removal 2-3
2-2-3. Bezel Assy and YA, YB Boards Removal 2-4
2-2-4. B Block Assy Removal 2-5
2-2-5. B and B1 Boards Removal 2-6
2-2-6. Extention Board Connection 2-7
2-2-7. Power Supply Assy Removal 2-8
2-2-8. Switching Regulator (APS-132 M board) Removal 2-9
2-2-9. T Board Removal 2-10
2-2-10. Plasma Display Panel Unit Removal (1/2) 2-11
2-2-10. Plasma Display Panel Unit Removal (2/2) 2-12
2-2-11. Plasma Display Panel Unit Packing When Sending it to FUJITSU 2-13

3. Electrical Adjustments

3-1. Equipment Required 3-1
3-2. Electrical Adjustments Using the Service Mode 3-1
3-3. White Balance Adjustment 3-25
3-4. A/D Calibration Adjustment 3-25
3-5. Video Processor Adjustment 3-26
3-6. Watch Error Adjustment 3-26
3-7. Switching Regulator (APS-132 M Board) Adjustments 3-27
3-7-1. Preparation 3-27
3-7-2. 13 V System Minimum Frequency Adjustment 3-27
3-7-3. VS System Minimum Frequency Adjustment 3-27
3-7-4. VA System Minimum Frequency Adjustment 3-27
3-7-5. PFC Voltage Adjustment 3-27
3-7-6. 5 V Adjustment 3-27
3-7-7. 13.5 V Adjustment 3-27
3-7-8. VS Adjustment 3-28
3-7-9. VS OCP 3-28
3-7-10. VA Adjustment 3-28
3-7-11. VA OCP 3-28

4. Trouble Shooting

4-1. Judging Method When Image Does Not Appear 4-1
4-2. Self Diagnosis Function 4-2
4-2-1. Outline 4-2
4-2-2. Criteria for Judgment of Abnormality 4-2

5. Semiconductors 5-1

6. Spare Parts

6-1. Notes on Repair Parts 6-1
6-2. Exploded Views 6-2
Cover 6-2
Chassis 6-4
Packing Materials 6-6
6-3. Electrical Parts List 6-8
6-4. Supplied Accessories 6-35

7. Block Diagrams

B (1/6), QA(1/2) 7-1
B (2/6), QA (2/2), B1 7-2
B (3/6) 7-3
B (4/6) 7-4
B (5/6), S1, YA, YB 7-5
B (6/6) 7-6
T 7-7
APS-132 M, F 7-8

8. Diagrams

8-1. Frame Schematic Diagram 8-2
Frame 8-2
8-2. Schematic Diagrams and Printed Wiring Boards 8-3
Schematic Diagrams
QA 8-3
B (1/13) 8-7
B (2/13) 8-8
B (3/13) 8-9

B (4/13) 8-10
B (5/13) 8-11
B (6/13) 8-12
B (7/13) 8-13
B (8/13) 8-14
B (9/13) 8-15
B (10/13) 8-16
B (11/13) 8-17
B (12/13) 8-18
B (13/13) 8-19
B1 8-25
YA, YB 8-26
S, F 8-27
T 8-30
APS-132 M (1/4) 8-31
APS-132 M (2/4) 8-32
APS-132 M (3/4) 8-33
APS-132 M (4/4) 8-34
Printed Wiring Boareds
QA 8-3
B 8-4
B1 8-24
YA, YB 8-26
S, F 8-27
T 8-28
APS-132 M 8-35

Section 1
Operating Instructions

This section is extracted from operation manual.

4-080-638-01 (1)

SONY

Flat Panel Monitor

GB

Operating Instructions

PFM-42B1
PFM-42B1E

© 2000 Sony Corporation

SONY PFM-42B1/42B1E

WARNING

Owner's Record

The model and serial numbers are located on the rear. Record the model and serial numbers in the spaces provided below. Refer to these numbers whenever you call upon your Sony dealer regarding this product.

Model No._____ Serial No._____

To prevent fire or shock hazard, do not expose the unit to rain or moisture.

To avoid electrical shock, do not open the cabinet. Refer servicing to qualified personnel only.

For the customers in the U.S.A.

If you have any questions about this product, you may call: Sony's Business Information Center (BIC) at 1-800-686-SONY (7669)

or Write to: Sony Customer Information Services Center 6900-29 Daniels Parkway, PMB 330 Fort Myers, Florida 33912

Declaration of Conformity

Trade Name:	SONY
Model:	PFM-42B1
Responsible Party:	Sony Electronics Inc.
Address:	1 Sony Drive, Park Ridge, NJ 07656 U.S.A.
Telephone Number:	201-930-6972

This device complies with Part 15 of the FCC Rules. Operation is subject to the following two conditions: (1) This device may not cause harmful interference, and (2) this device must accept any interference received, including interference that may cause undesired operation.

This equipment has been tested and found to comply with the limits for a Class B digital device, pursuant to Part 15 of the FCC Rules. These limits are designed to provide reasonable protection against harmful interference in a residential installation. This equipment generates, uses, and can radiate radio frequency energy and, if not installed and used in accordance with the instructions, may cause harmful interference to radio communications. However, there is no guarantee that interference will not occur in a particular installation. If this equipment does cause harmful interference to radio or television reception, which can be determined by turning the equipment off and on, the user is encouraged to try to correct the interference by one or more of the following measures:

- Reorient or relocate the receiving antenna.
- Increase the separation between the equipment and receiver.
- Connect the equipment into an outlet on a circuit different from that to which the receiver is connected.
- Consult the dealer or an experienced radio/TV technician for help.

You are cautioned that any changes or modifications not expressly approved in this manual could void your authority to operate this equipment.

For the customers in Canada

This class B digital apparatus complies with Canadian ICES-003.

For PFM-42B1E users

THIS APPARATUS MUST BE EARTHED

IMPORTANT

The wires in this mains lead are coloured in accordance with the following code:

Green-and-yellow : Earth
Blue : Neutral
Brown : Live

As the colours of the wires in the mains lead of this apparatus may not correspond with the coloured markings identifying the terminals in your plug proceed as follows:
The wire which is coloured green-and-yellow must be connected to the terminal in the plug which is marked with the letter E or by the safety earth symbol ⏚ or coloured green or green-and-yellow.
The wire which is coloured blue must be connected to the terminal which is marked with the letter N or coloured black.
The wire which is coloured brown must be connected to the terminal which is marked with the letter L or coloured red.

Voor de klanten in Nederland

- Dit apparaat bevat een Li-ion batterij voor clock back-up.
- De batterij voor clock back-up is vastgesoldeerd op de B printplaat BAT500.
- Raadpleeg uw leverancier over de verwijdering van de batterij op het moment dat u het apparaat bij einde levensduur afdankt.
- Gooi de batterij niet weg, maar lever hem in als KCA.

The socket-outlet should be installed near the equipment and be easily accessible.

Table of Contents

Precautions ..... 5 (GB)
Features ..... 6 (GB)
Location and Function of Parts and Controls ..... 7 (GB)
Front / Rear / Right Side ..... 7 (GB)
⏻ (standby) Switch / Indicator Section ..... 8 (GB)
Control Button Section (Rear) ..... 8 (GB)
Connector Panel ..... 9 (GB)
Remote Commander RM-42B ..... 10 (GB)
Caution ..... 11 (GB)
Connections ..... 12 (GB)
Connecting the AC Power Cord ..... 12 (GB)
Connection Example ..... 12 (GB)
Using On-screen Menus ..... 14 (GB)
Operating Through Menus ..... 14 (GB)
Menu Guide ..... 14 (GB)
Watching the Picture ..... 18 (GB)
Switching the Input Signal ..... 18 (GB)
Switching the Display Mode ..... 19 (GB)
Input Signal and Monitor Status Information Display ..... 20 (GB)
Adjusting the Picture ..... 22 (GB)
Adjusting the Contrast, Brightness, Chroma, and Phase, etc. ..... 22 (GB)
Restoring the PIC CONTROL Menu Items to Their Original Settings ..... 23 (GB)
Resizing and Positioning the Picture ..... 24 (GB)
Resizing the Picture ..... 24 (GB)
Adjusting the Picture Position ..... 25 (GB)
Restoring the Original Picture Size and Position ..... 25 (GB)
Changing the Aspect Ratio ..... 26 (GB)
Adjusting the Linearities ..... 26 (GB)
Adjusting the Pixels ..... 27 (GB)
Using the Memory Function ..... 28 (GB)
Storing the Current Setting ..... 28 (GB)
Calling Up a Stored Setting ..... 29 (GB)
Selecting the On-screen Language ..... 30 (GB)

Reducing Afterimage/Ghosting (Screen Saver Function)..... 31 (GB)
Reversing the Image ..... 31 (GB)
Changing the Display Position Automatically..... 32 (GB)
Controlling Power On/Off Automatically (Power Control Function)..... 33 (GB)
Power Saving Function..... 33 (GB)
On/Off Timer Function..... 34 (GB)
Self-diagnosis Function..... 35 (GB)
Operating a Specific Monitor With the Remote Commander ..... 35 (GB)
Using Other Remote Commander Models ..... 37 (GB)
Specifications ..... 38 (GB)

Precautions

On safety
- A nameplate indicating operating voltage, power consumption, etc. is located on the back of the unit.
- Should any solid object or liquid fall into the cabinet, unplug the unit and have it checked by qualified personnel before operating it any further.
- Unplug the unit from the wall outlet if it is not to be used for several days or more.
- To disconnect the AC power cord, pull it out by grasping the plug. Never pull the cord itself.
- When the unit is installed on the floor, be sure to use the optional stand.

On installation
- Allow adequate air circulation to prevent internal heat build-up. Do not place the unit on surfaces (rugs, blankets, etc.) or near materials (curtains, draperies) that may block the ventilation holes.
- Do not install the unit in a location near heat sources such as radiators or air ducts, or in a place subject to direct sunlight, excessive dust, mechanical vibration or shock.
- When you install multiple equipment with the unit, the following problems, such as malfunction of the Remote Commander, noisy picture, noisy sound, may occur depending on the position of the unit and other equipment.

On the PDP (Plasma Display Panel)
- There may be some tiny black points and/or bright points on the PDP. These points are normal.
- Do not display the same still image on the screen for a long time. Otherwise, an afterimage or ghost may appear on a part of the panel. Use the screen saver function to equalize use of the screen display.

On cleaning
To keep the unit looking brand-new, periodically clean it with a mild detergent solution. Never use strong solvents such as thinner or benzine, or abrasive cleansers since these will damage the cabinet. As a safety precaution, unplug the unit before cleaning it.

On repacking
Do not throw away the carton and packing materials. They make an ideal container in which to transport the unit. When shipping the unit to another location, repack it as illustrated on the carton.

If you have any questions about this unit, contact your authorized Sony dealer.

Features

The PFM-42B1/42B1E series are 16:9 42-inch flat panel monitors utilizing a PDP (Plasma Display Panel), which can accept various types of signals with the built-in scan converter.

Improved image quality

The PFM-42B1/42B1E series achieves higher image quality with its PDP (Plasma Display Panel) set to 1024 dots × 1024 lines. This makes for a finely-detailed HDTV or PC image.

Internal high-performance scan converter

The monitor has a high performance scan converter. Using a unique algorithm, the monitor processes signals in a wide range of formats Video, HDTV, PC, etc.

Flexibility

An option slot is in place for future expansion. The slot-in optional adaptor allows for quick and easy system upgrades.

Other features

- Three sets of video inputs with audio input: one composite video or Y/C input and two RGB/ component inputs. (For the PFM-42B1E, the BKM-B10 video input adaptor is required to input the composite video and Y/C signals.)
- Displays the HDTV signal with a tri-level sync signal.
- Three dimensional comb filter for NTSC Y/C separation.
- Line correlation comb filter for PAL Y/C separation.
- Automatic input signal detection with on-screen indication.
- Windows[1] 95/98 PnP (Plug and Play) compatible.
- Picture AGC function this function automatically adjusts and improves the contrast when a low intensity signal is input.
- On-screen menu for various adjustments and settings
- On-screen display in six languages for user-friendly access. (Languages: English, German, French, Italian, Spanish and Japanese)
- Fine adjustment of image size and position
- Memory function for storage of up to twenty picture settings.
- ID control
- Self-diagnosis function
- Remote (RS-232C) connector (D-sub 9-pin)
- Accepts infrared Sony Remote Commanders using SIRCS code.
- Vertical setup
- Closed caption decoder
- Screen saver to reduce afterimage or ghosting.

Warning on power connection

Use the proper power cord for your local power supply.

	United States, Canada	Continental Europe		United Kingdom, Ireland, Australia, New Zealand	Japan
Plug type	VM0233	COX-07	636	—a)	VM1296
Female end	VM0089	COX-02	VM0310B	VM0303B	VM1313
Cord type	SVT	H05VV-F		CEE (13) 53rd (O.C)	HVCTF
Minimum cord set rating	10A/125V	10A/250V		10A/250V	10A/125V
Safety approval	UL/CSA	VDE		VDE	DENTORI

a) Note: Use an appropriate rating plug which is applied to local regulations.

1) Windows is a registered trademark of the Microsoft Corporation (U.S.A. and other countries).

Location and Function of Parts and Controls

Front / Rear / Right Side

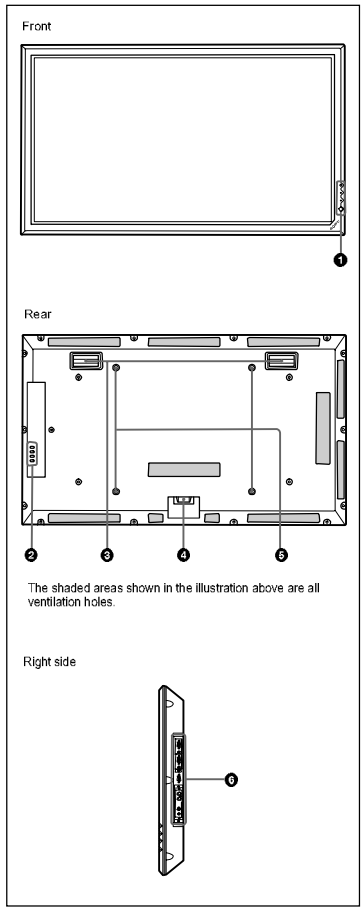

1 ⏻ (standby) switch / indicator section

For details on the ⏻ (standby) switch / indicator section, see "⏻ (standby) Switch / Indicator Section" on page 8 (GB).

2 Control button section

For details on the control button section, see "Control Button Section (Rear)" on page 8 (GB).

3 Carrying handles

4 ∿AC IN socket

Connect the supplied AC power cord to this socket and to a wall outlet. Once you connect the AC power cord, the STANDBY indicator lights up in red and the monitor turns to the standby mode.

5 Stand installation hooks

Use these hooks to install the stand (not supplied).

6 Connector panel

For details on the connector panel, see "Connector Panel" on page 9 (GB).

⏻ (standby) Switch / Indicator Section

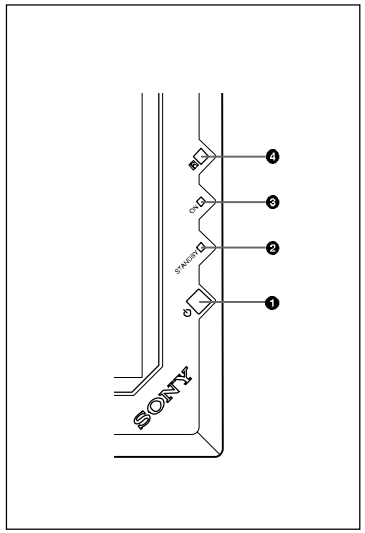

❶ ⏻ (standby) switch
Press to turn on the monitor. Press again to go back to the standby mode.

❷ STANDBY indicator
Lights up in red in the standby mode.
When the STANDBY indicator flashes, see "Self-diagnosis Function" on page 35 (GB).

❸ ON indicator
Lights up in green when the monitor is turned on.

❹ Remote control detector
Receives the signal from the Remote Commander.

Control Button Section (Rear)

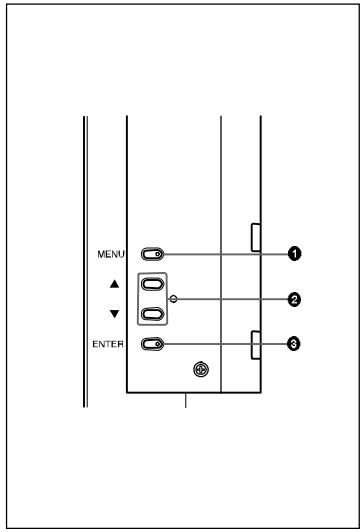

❶ MENU button
Press to make the menu appear. When the menu is displayed on the monitor screen, press to return to the previous menu level. To clear the menu display, press this button repeatedly until the menu disappears.

❷ ▲ / ▼ buttons
Press to move the cursor (▶) to an item or to adjust a value in a menu.

❸ ENTER button
Press to select the desired item from the menu displayed.

Connector Panel

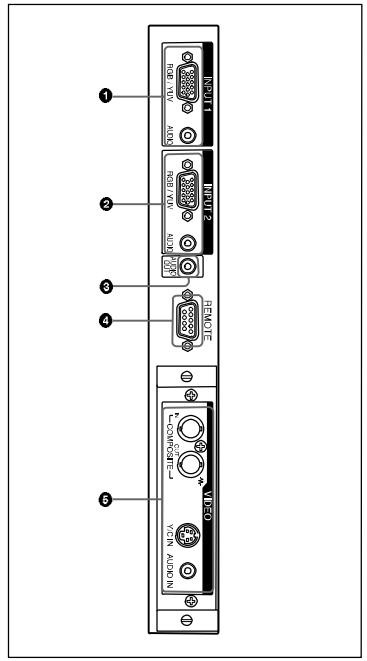

❶ INPUT1 connectors
RGB/YUV (D-sub 15-pin): Connects to the RGB signal or component (YUV) signal output of a computer or a piece of video equipment.
This monitor also accepts an HD analog component (Y/PB/PR) signal. See "Pin assignment" on page 39 (GB) when inputting a component signal.
AUDIO (Stereo minijack): Inputs an audio signal. Connects to the audio output of a computer or a piece of video equipment.

❷ INPUT2 connectors
RGB/YUV (D-sub 15-pin): Connects to the RGB signal or component (YUV) signal output of a computer or a piece of video equipment.
This monitor also accepts an HD analog component (Y/PB/PR) signal. See "Pin assignment" on page 39 (GB) when inputting a component signal.
AUDIO (Stereo minijack): Inputs an audio signal. Connects to the audio output of a computer or a piece of video equipment.

❸ AUDIO OUT jack (Stereo minijack)
From among the audio signals input at the audio input jacks, outputs the audio signal displayed on the monitor screen.

❹ REMOTE (RS-232C) connector (D-sub 9-pin)
This connector allows remote control of the monitor using the RS-232C protocol. For details, contact your authorized Sony dealer.

❺ VIDEO connectors
The PFM-42B1E is not equipped with VIDEO connectors. For the PFM-42B1E, composite video and Y/C input can be input to the monitor when the BKM-B10 video input adaptor (not supplied) is installed in the monitor.
COMPOSITE IN (BNC-type): Connects to the composite video signal output of a piece of video equipment.
COMPOSITE OUT (BNC-type): Connects to the composite video signal input of a piece of video equipment.
Y/C IN (Mini DIN 4-pin): Connects to the Y/C signal output of a piece of video equipment.
AUDIO IN (Stereo minijack): Inputs an audio signal. Connects to the audio output of a piece of video equipment.

Remote Commander RM-42B

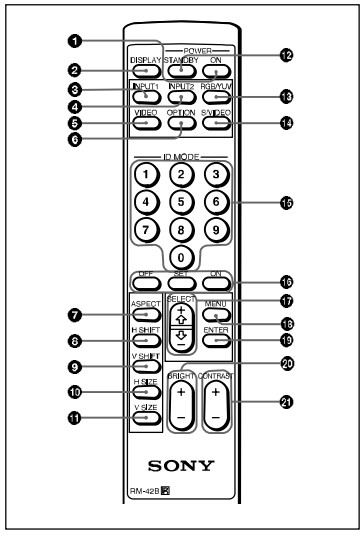

❶ POWER ON switch
Press to turn on the monitor.

❷ DISPLAY button
Displays the input signal information and the time at the top of the monitor screen. Press again to clear it.

❸ INPUT1 button
Selects the signal input from the INPUT1 connectors.

❹ INPUT2 button
Selects the signal input from the INPUT2 connectors.

❺ VIDEO button
Selects the signal input from the COMPOSITE IN connector or Y/C IN connector from among the VIDEO connectors.

❻ OPTION button
Selects the signal input from the optional adaptor when you install it in the unit.

❼ ASPECT button
Changes the aspect ratio of the picture.

❽ H SHIFT button
Adjusts the horizontal centering. Press this button and then adjust the horizontal centering with the SELECT +↑/ ↓ button ⓱.

❾ V SHIFT button
Adjusts the vertical centering. Press this button and then adjust the vertical centering with the SELECT +↑/ ↓ button ⓱.

❿ H SIZE button
Adjusts the horizontal picture size. Press this button and then adjust the horizontal picture size with the SELECT +↑/ ↓ button ⓱.

⓫ V SIZE button
Adjusts the vertical picture size. Press this button and then adjust the vertical picture size with the SELECT +↑/ ↓ button ⓱.

⓬ STANDBY button
Press to turn the monitor to the standby mode.

⓭ RGB/YUV button
Press to select the format matching that of the input signal connected to the INPUT1 or INPUT2 connector. Each press toggles between RGB and YUV.

⓮ S/VIDEO button
Press to select the signal input from the COMPOSITE IN connector or Y/C IN connector from among the VIDEO connectors. Each press toggles between COMPOSITE IN and Y/C IN.

⓯ Number buttons
Press to enter the index number.

⓰ ID MODE (ON/SET/OFF) buttons
Press the ON button to make an index number appear on the screen. Then enter the index number of the monitor you want to operate using the number buttons ⓯ and press the SET button. After you finish the operation, press the OFF button to return from the ID mode to the normal mode.
For details about the index number, see "Operating a Specific Monitor With the Remote Commander" on page 35 (GB).

⓱ SELECT +↑/–↓ button
Press to move the cursor (▶) to an item or to adjust a value in a menu.

⓲ MENU button
Press to make the menu appear. When the menu is displayed on the monitor screen, press to return to the previous menu level. To clear the menu display, press this button repeatedly until the menu disappears.

⓳ ENTER button
Press to select the desired item in a menu.

⓴ BRIGHT +/– button
Adjusts the brightness.

㉑ CONTRAST +/– button
Adjusts the contrast.

Installing batteries

Insert two size AA (R6) batteries in correct polarity.

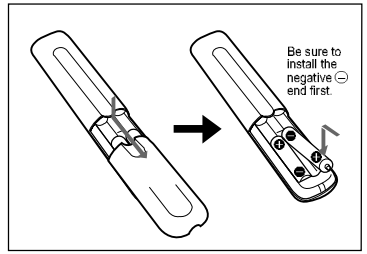

- In normal operation, batteries will last up to half a year. If the Remote Commander does not operate properly, the batteries might be exhausted sooner. Replace them with new ones.
- To avoid damage from possible battery leakage, remove the batteries if you do not plan to use the Remote Commander for a fairly long time.

When the Remote Commander does not work

Check that the STANDBY indicator lights up and the REMOTE MODE in the REMOTE menu is not set to OFF. The Remote Commander operates the monitor only when both of the two conditions below are met.
- The monitor is turned on, or it is in the standby mode.
- The REMOTE MODE in the REMOTE menu is set to TV or to PJ.

For details about the REMOTE MODE, see "REMOTE menu" on page 16 (GB).

Caution

- When you use the monitor, make sure there is more space between the edges of the unit and other walls or the ceiling than that shown in the figure below. This will allow for proper ventilation.
- The ambient temperature must be 0 °C to +35 °C (32 °F to 95 °F).
- Use the SU-42B monitor stand (not supplied) as a stand.
- The wall should be reinforced to bear at least five times the weight of the monitor (approx. 29.4 kg) plus the wall bracket you are planning to use.
- Regarding installation of hardware such as brackets, screws, and bolts, we cannot specify what to use because actual installation is up to the authorized local dealers. For installation, consult with qualified Sony personnel.

When using the stand (not supplied)

Front

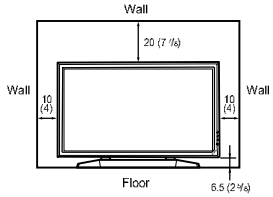

Side

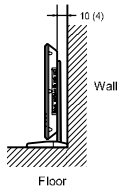

Units: cm (inches)

When using the monitor horizontally

Front

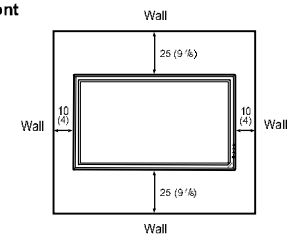

Side

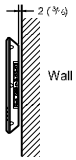

Units: cm (inches)

When using the monitor vertically

Front

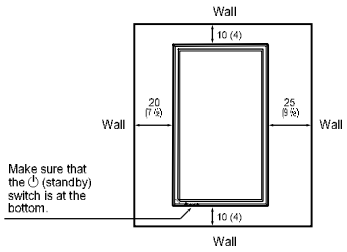

Side

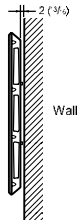

Units: cm (inches)

Connections

Connecting the AC Power Cord

1 Plug the AC power cord into the AC IN socket. Then, attach the AC plug holder (supplied) to the AC power cord.

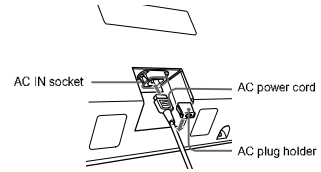

2 Slide the AC plug holder over the cord until it connects to the AC IN socket cover.

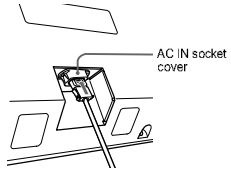

To remove the AC power cord

After squeezing the AC plug holder and freeing it, grasp the plug and pull out the AC power cord.

Connection Example

Before you start

- First make sure that the power to each piece of equipment is turned off.
- Use connecting cables suitable for the equipment to be connected.
- The cable connectors should be fully inserted into the jacks. A loose connection may cause hum and other noise.
- To disconnect the cable, pull it out by grasping the plug. Never pull the cable itself.
- Refer to the instruction manual of the equipment to be connected.
- Insert the plug securely into the AC IN socket.
- Use one of the two AC plug holders (supplied) that will securely hold the AC plug.

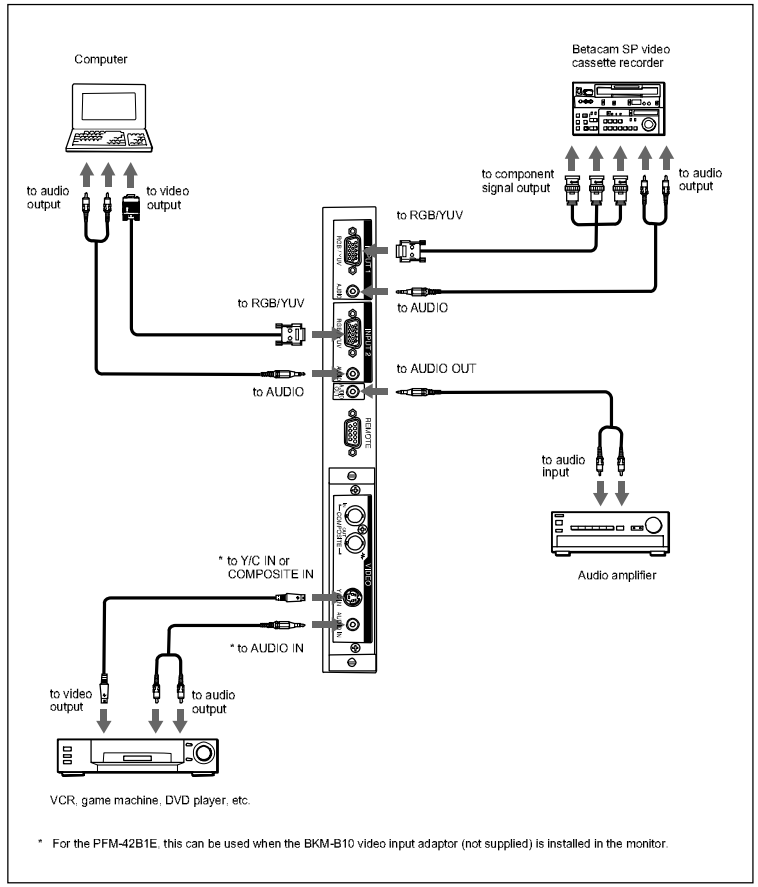

* For the PFM-42B1E, this can be used when the BKM-B10 video input adaptor (not supplied) is installed in the monitor.

Using On-screen Menus

Operating Through Menus

Menu operating buttons

Use the buttons on the monitor or the Remote Commander for menu operations.

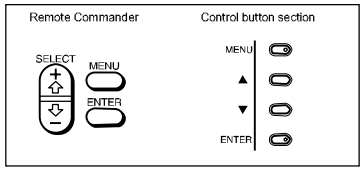

The buttons on the control button section are used for purposes of explanation in this operating instructions. The SELECT +↑/ ↓ button on the Remote Commander has the same functions as the ▲/▼ buttons on the control button section.

Configuration of the menu

To select the language used in the menu, see page 30 (GB).

1 Press MENU.
The main menu appears on the monitor screen.

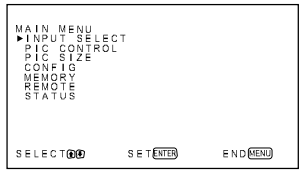

2 Press ▲/▼ to move the cursor (►) and press ENTER to select a menu.
The selected menu appears on the monitor screen.

3 Press ▲/▼ to move the cursor (►) and press ENTER to select an item.
The menu for the selected item appears on the monitor screen.

4 Press ▲/▼ to adjust or select the setting and press ENTER to set.
The setting is registered and the menu returns to the previous menu.

To return to the normal screen, press the MENU button repeatedly until the menu disappears.

Menu Guide

Note

" " appears next to an item when its function is not available. The availability depends on the types of input signal.

PIC CONTROL menu

This menu is used for adjusting the picture.

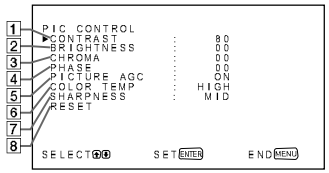

1 CONTRAST
Press ▲ to increase the contrast and press ▼ to decrease it.

2 BRIGHTNESS
Press ▲ to make the picture brighter and press ▼ to make it darker.

3 CHROMA
Press ▲ to increase color saturation and press ▼ to decrease it.

4 PHASE
Press ▲ to make the overall picture greenish and press ▼ to make it purplish.

5 PICTURE AGC
Select ON to automatically increase the brightness when a low brightness signal is input.
This function works only for VIDEO input or 15 kHz YUV input.

6 COLOR TEMP
Changes the color temperature.
For details, see "COLOR TEMP" on page 22 (GB).

7 SHARPNESS
Changes the outline correction level using the following three levels (HIGH, MID or LOW).
For details, see "SHARPNESS" on page 23 (GB).

8 RESET
Restores the factory settings in the PIC CONTROL menu items 1 to 7.
For details on using the reset function, see "Restoring the PIC CONTROL Menu Items to Their Original Settings" on page 23 (GB).

PIC SIZE menu

This menu is used for resizing and positioning the picture.

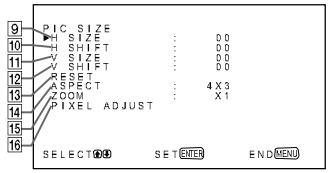

9 H SIZE
Adjusts the horizontal picture size. Press ▲ to enlarge the horizontal size and press ▼ to diminish it.

10 H SHIFT
Adjusts the horizontal centering. Press ▲ to move the picture to the right and press ▼ to move it to the left.

11 V SIZE
Adjusts the vertical picture size. Press ▲ to enlarge the vertical size and press ▼ to diminish it.

12 V SHIFT
Adjusts the vertical centering. Press ▲ to move the picture up and press ▼ to move it down.

13 RESET
Restores the factory settings in PIC SIZE menu items 9 to 12.
For details on using the reset function, see "Restoring the Original Picture Size and Position" on page 25 (GB).

14 ASPECT
Changes the aspect ratio of the picture.
For details, see "Changing the Aspect Ratio" on page 26 (GB).

15 ZOOM
Enlarges the image (in order) to double (×2), triple (×3) and quadruple (×4).

Note

When you set ASPECT to W ZOOM or LB ZOOM, " " appears and you cannot set ZOOM to ×2, ×3 or ×4.

16 PIXEL ADJUST
Adjusts the dot phase and the total number of horizontal pixels when you see noise on the edges of the characters and the vertical lines.
For details, see "Adjusting the Pixels" on page 27 (GB).

CONFIG menu

This menu is used for adjusting the signal or selecting the language. This menu consists of two pages; CONFIG (1/2), CONFIG (2/2). To toggle between pages, press the ▲/▼ buttons repeatedly until the other page appears.

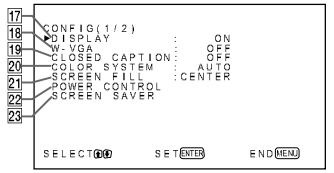

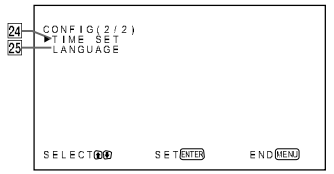

17 DISPLAY
Select ON to display the input signal information for about five seconds at the top of the monitor screen when the power is turned on or when switching the input signal.

18 W-VGA
Select ON to input the W-VGA (852×480) signal. When you set this item to ON, the VGA input signal is determined to be 852×480. Otherwise, the VGA input signal is determined to be 640×480.

19 CLOSED CAPTION
Displays closed captions.
For details, see "Displaying closed captions" on page 19 (GB).

20 COLOR SYSTEM
Selects the input signal.
AUTO: to display NTSC, PAL or SECAM signals
443NT: to display NTSC4.43 signals
PAL60: to display PAL60 signals
PAL-M: to display PAL-M signals

21 SCREEN FILL
Selects the point of origin for resizing the picture.
CENTER: Sets the point of origin at the center of the monitor.
CORNER: Sets the point of origin at the upper-left corner of the monitor.

22 POWER CONTROL
Sets the length of time until the system goes into the power saving mode.
For details, see "Controlling Power On/Off Automatically (Power Control Function)" on page 33 (GB).

23 SCREEN SAVER
Enables a screen saver to reduce afterimage or ghosting.
For details, see "Reducing Afterimage/Ghosting (Screen Saver Function)" on page 31 (GB).

24 TIME SET
Sets the time.
For details, see "Adjusting the time" on page 19 (GB).

25 LANGUAGE
Selects the on-screen language (English, German, French, Italian, Spanish or Japanese).
For details, see "Selecting the On-screen Language" on page 30 (GB).

MEMORY menu

This menu is used for saving or recalling the settings in the PIC CONTROL and PIC SIZE menus.

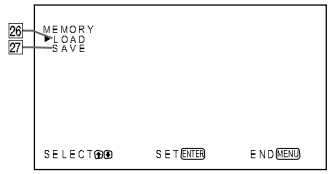

For details, see "Using the Memory Function" on page 28 (GB).

26 LOAD
Recalls the preset settings.

27 SAVE
Saves the settings.

REMOTE menu

This menu is used for remote control settings.

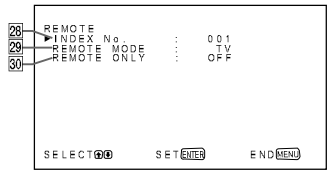

28 INDEX No.
Sets the index number of the monitor.

Note
When you set the number, use the buttons on the monitor.
For details about the index number, see "Operating a Specific Monitor With the Remote Commander" on page 35 (GB).

29 REMOTE MODE
Selects the Remote Commander mode.
TV: The Sony monitor's or the TV's commander
PJ: The Sony projector's commander
OFF: Disables the remote control.

Note
When you change the Remote Commander mode, use the buttons on the monitor. You cannot change the Remote Commander mode with the Remote Commander.
For details, see "Using Other Remote Commander Models" on page 37 (GB).

30 REMOTE ONLY
Select ON to disable the control buttons on the monitor. The monitor can only be controlled with the Remote Commander.
To cancel the REMOTE ONLY mode, set REMOTE ONLY to OFF with the Remote Commander, or press the MENU button while pressing the ⏻ (standby) switch on the monitor. The monitor turns to the standby mode and the REMOTE ONLY mode is cancelled.
The setting in this item is still retained when the AC power cord is disconnected or when you turn on/off the monitor with the Remote Commander.

STATUS menu

This menu is used for displaying the internal status of the monitor.

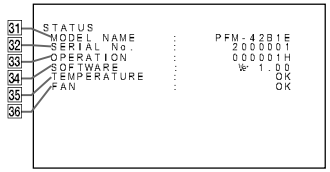

31 MODEL NAME
Indicates the model name.

32 SERIAL No.
Indicates the serial number.

33 OPERATION
Indicates the total number of hours of operation.

Note
The standby mode is not counted as part of the OPERATION time.

34 SOFTWARE
Indicates the system software version.

35 TEMPERATURE
Indicates whether the internal temperature of the monitor is normal.
OK: Normal
NG: Unusual
When the internal temperature is unusual, NG is displayed and the item flashes in red. The STANDBY indicator on the ⏻ (standby) switch / indicator section also flashes.

Note
The "TEMPERATURE NG" message may appear when the ventilation holes are blocked or the monitor is installed in a poorly ventilated location. In this case, check that the ventilation holes are not blocked and install the monitor in a well ventilated location. If the message is still displayed, contact your authorized Sony dealer.
When the STANDBY indicator flashes or NG is indicated, see "Self-diagnosis Function" on page 35 (GB).

36 FAN
Cooling fans are built into this monitor. This item indicates whether the cooling fans work properly.
OK: Normal
NG: Unusual
When the cooling fans are not working normally, NG is displayed and the item flashes in red. The STANDBY indicator on the ⏻ (standby) switch / indicator section also flashes.

Notes
- When the "FAN NG" message appears, contact your authorized Sony dealer.
  When the STANDBY indicator flashes or NG is indicated, see "Self-diagnosis Function" on page 35 (GB).
- The cooling fans detect the monitor's internal temperature and control the fan rotation. If the ambient temperature is high, the fan speed increases and the fan noise will be louder.

Watching the Picture

Before you start

- Turn on the monitor.
- Turn on the connected equipment and play a video source.
- To display the input signal information on the screen when turning on the power or switching the input signal, set "DISPLAY" in the CONFIG (1/2) menu to ON.
- To select the on-screen language used in the menu, see page 30 (GB).

Switching the Input Signal

1 Press MENU.
The main menu appears on the monitor screen.

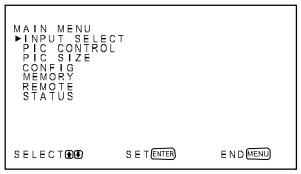

2 Press ▲ / ▼ to move the cursor (▶) to "INPUT SELECT" and press ENTER.
The currently selected input signal and INPUT SELECT menu appear on the monitor screen.

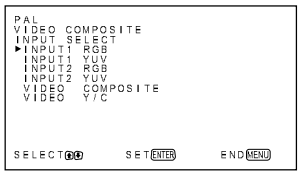

3 Press ▲ / ▼ to move the cursor (▶) to the input source to be displayed and press ENTER.
INPUT1 RGB: Selects the audio and video signal input from the INPUT1 connectors when the input signal is an RGB signal.
INPUT1 YUV: Selects the audio and video signal input from the INPUT1 connectors when the input signal is a component signal.
INPUT2 RGB: Selects the audio and video signal input from the INPUT2 connectors when the input signal is an RGB signal.
INPUT2 YUV: Selects the audio and video signal input from the INPUT2 connectors when the input signal is a component signal.
VIDEO COMPOSITE: Selects the audio and video signal input from the COMPOSITE IN connector and AUDIO IN jack among the VIDEO connectors.
VIDEO Y/C: Selects the audio and video signal input from the Y/C IN connector and AUDIO IN jack among the VIDEO connectors.
(For the PFM-42B1E, VIDEO COMPOSITE and VIDEO Y/C only appear when the BKM-B10 video input adaptor (not supplied) is installed.)

The selected input signal appears on the monitor screen.

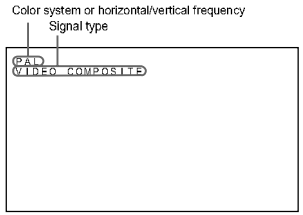

You can also switch the input signal using the Remote Commander.

Note

We recommend input source video equipment equipped with a TBC (time base corrector). If the monitor receives a signal without TBC, the picture may disappear due to disturbance of the sync signal.

Switching the Display Mode

Displaying closed captions

1 Press MENU.
The main menu appears on the monitor screen.

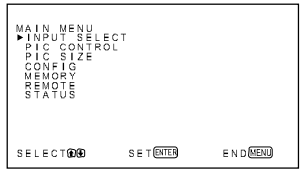

2 Press ▲ / ▼ to move the cursor (▶) to "CONFIG" and press ENTER.
The CONFIG (1/2) menu appears on the monitor screen.

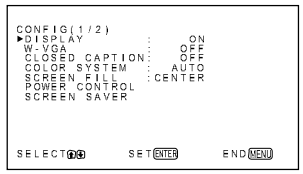

3 Press ▲ / ▼ to move the cursor (▶) to "CLOSED CAPTION" and press ENTER.
The following menu appears on the monitor screen.

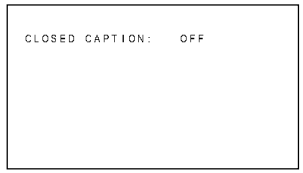

4 Select the caption type with ▲ / ▼.
OFF: The caption is not displayed.
CAPT1: Displays caption1 over the picture.
CAPT2: Displays caption2 over the picture.
TEXT1: Displays caption1 against a black background.
TEXT2: Displays caption2 against a black background.

5 Press MENU.
The menu returns to the CONFIG (1/2) menu.

Adjusting the time

1 In the CONFIG (2/2) menu, press ▲ / ▼ to move the cursor (▶) to "TIME SET" and press ENTER.
The following menu appears on the monitor screen.

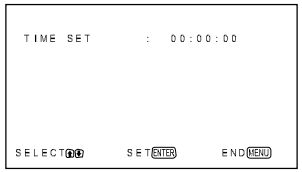

2 Press ENTER.
The background of the hour is displayed in cyan.

3 Adjust the hour with ▲ / ▼ and press ENTER.
The setting for the hour is entered and the background of the minute is displayed in cyan.

4 Similarly, adjust the minute and press ENTER.
The setting for the minute is entered and the second is reset to 00.

To display the time

Press the DISPLAY button on the Remote Commander. The time is displayed in the upper-right corner of the monitor.

Input Signal and Monitor Status Information Display

Input signal and monitor status information is displayed on the monitor screen for about five seconds when the power is turned on or when switching the input signal.
To disable this function, follow the steps below.

1 In the CONFIG (1/2) menu, press ▲/▼ to move the cursor (▶) to "DISPLAY" and press ENTER. The following menu appears on the monitor screen.

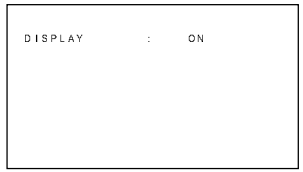

2 Press ▲/▼ to set DISPLAY to OFF and press ENTER.
The DISPLAY function is disabled.

To display the information

Set DISPLAY to ON in step **2** above. The factory default is ON.

Note

You can display the input signal information and the time anytime by pressing the DISPLAY button on the Remote Commander, regardless of the above setting.

The input signal information list

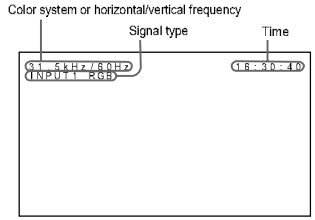

Preset input signals			
	Signal name	Color system or horizontal/ vertical frequency	
	Computer signals		
1	VGA[a]-1 (VGA 350)	31.5kHz	70Hz
2	640×350@85Hz (VESA[b] STD)	37.9kHz	85Hz
3	640×400@85Hz (VESA STD)	37.9kHz	85Hz
4	640×480@60Hz (VESA STD)	31.5kHz	60Hz
5	Mac[c] 13"	35.0kHz	67Hz
6	640×480@72Hz (VESA STD)	37.9kHz	73Hz
7	640×480@75Hz (VESA STD)	37.5kHz	75Hz
8	640×480@85Hz (VESA STD)	43.3kHz	85Hz
9	852×480@60Hz (I/O DATA[d])	31.7kHz	60Hz
10	VGA (VGA TEXT)	31.5kHz	70Hz
11	720×400@85Hz (VESA STD)	37.9kHz	85Hz
12	800×600@56Hz (VESA STD)	35.2kHz	56Hz
13	800×600@60Hz (VESA STD)	37.9kHz	60Hz
14	800×600@72Hz (VESA STD)	48.1kHz	72Hz
15	800×600@75Hz (VESA STD)	46.9kHz	75Hz
16	800×600@85Hz (VESA STD)	53.7kHz	85Hz
17	Mac 16"	49.7kHz	75Hz
18	1024×768@60Hz (VESA STD)	48.4kHz	60Hz
19	1024×768@70Hz (VESA STD)	56.5kHz	70Hz
20	1024×768@75Hz (VESA STD)	60.0kHz	75Hz
21	1024×768@85Hz (VESA STD)	68.7kHz	85Hz
22	1152×864@75Hz (VESA STD)	67.5kHz	75Hz
23	Mac 21"	68.7kHz	75Hz
24	1280×960@60Hz (VESA STD)	60.0kHz	60Hz
25	1280×960@85Hz (VESA STD)	85.9kHz	85Hz
26	1280×1024@60Hz (VESA STD)	64.0kHz	60Hz
27	1280×1024@75Hz (VESA STD)	80.0kHz	75Hz
28	1280×1024@85Hz (VESA STD)	91.1kHz	85Hz
29	1600×1200@60Hz (VESA STD)	75.0kHz	60Hz
	SDTV/HDTV		
1	PAL	PAL	
2	NTSC	NTSC	
3	SECAM	SECAM	
4	NTSC4.43	NTSC/4.43	
5	PAL60	PAL/60	
6	PAL-M	PAL-M	
7	1080/24psf	1080/48I	
8	1080/50i	1080/50I	
9	575/50p	575/50P	
10	480/60p	480/60P	
11	1080/60i	1080/60I	
12	720/60p	720/60P	

a) VGA is a registered trademark of International Business Machines Corporation, U.S.A.
b) VESA is a registered trademark of the Video Electronics Standards Association.
c) Mac (Macintosh) is a registered trademark of Apple Computer, Inc.
d) This item is only available when you use a graphic accelerator board manufactured by I/O DATA Corporation.

Notes

- When inputting an HDTV signal, input the tri-level sync signal to the 2nd pin of the INPUT1 or INPUT2 (D-sub 15-pin) connector.
- When inputting a computer signal at the resolution shown in item No. 29, set H SIZE, H SHIFT, V SIZE and V SHIFT to the standard (00) and set ZOOM to ×1 in the PIC SIZE menu, or the picture might oscillate.

Actual on-screen display of the monitor status

On-screen display	Significance
31.5kHz / 60Hz (e.g.)	The selected input signal is computer RGB.
525 / 60 (e.g.)	The selected input signal is RGB or component video.
NTSC (e.g.)	The selected input signal is NTSC.
OTHERS	The input signal is out of the capture range.
NO SYNC	There is no input signal.
INPUT1 RGB	The signal mode of INPUT1 is set to RGB.
INPUT1 YUV	The signal mode of INPUT1 is set to component video.
VIDEO COMPOSITE	Composite video input is selected for VIDEO.
VIDEO Y/C	Y/C video input is selected for VIDEO.

Adjusting the Picture

While watching the picture, you can adjust contrast, brightness, chroma, phase, and so on, to suit your taste. The adjustments can be carried out for each input signal separately. You can also store the adjusted levels in memory.

Adjusting the Contrast, Brightness, Chroma, and Phase, etc.

Press MENU so that the main menu appears on the monitor screen and select "CONTRAST", "BRIGHTNESS", "CHROMA", "PHASE", "PICTURE AGC", "COLOR TEMP" or "SHARPNESS" from the PIC CONTROL menu with ▲/▼.

CONTRAST

Select "CONTRAST" with ▲/▼ and press ENTER.
Adjust the contrast with ▲/▼ in the range from MIN (0) to MAX (+100).
▲: to increase picture contrast
▼: to decrease picture contrast

BRIGHTNESS

Select "BRIGHTNESS" with ▲/▼ and press ENTER.
Adjust the brightness with ▲/▼ in the range from MIN (50) to MAX (+50).
▲: to make the picture brighter
▼: to make the picture darker

CHROMA

Select "CHROMA" with ▲/▼ and press ENTER.
Adjust the chroma with ▲/▼ in the range from MIN (50) to MAX (+50).
▲: to increase color intensity
▼: to decrease color intensity

PHASE

Select "PHASE" with ▲/▼ and press ENTER.
Adjust the phase with ▲/▼ in the range from MIN (50) to MAX (+50).
▲: to make the overall picture greenish
▼: to make the overall picture purplish

Automatic brightness control — Enhancing the image contrast

If the average brightness of the image is low, the system can automatically raise the contrast level to enhance the brightness. This function works well for displaying dark images.

Select "PICTURE AGC" with ▲/▼ and press ENTER.
Set PICTURE AGC to ON or OFF with ▲/▼.

COLOR TEMP (Color temperature)

You can also set the color temperature. You can select HIGH or LOW, or adjust each gain more precisely. Up to six adjusted color temperatures can be registered. You can rename them (up to six characters in length).

1 Select "COLOR TEMP" with ▲/▼ and press ENTER.

2 Select the color temperature with ▲/▼ and press ENTER.
HIGH: to set the color temperature to high
LOW: to set the color temperature to low
1 – 6: to set the gain more precisely

When you select HIGH or LOW, the menu returns to the PIC CONTROL menu.

When you select "1" to "6"
When you select "1" to "6", the following menu appears on the monitor screen.

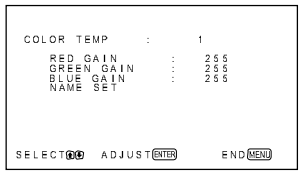

(1) Select a number to register with ▲/▼ and press ENTER.
The cursor (▶) appears on the monitor screen.

(2) Press ▲/▼ to move the cursor (▶) to the gain item that you want to set and press ENTER.
The following menu appears on the monitor screen.

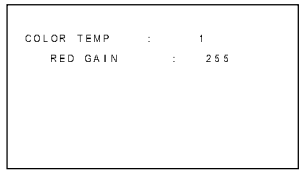

(3) Adjust the gain (10 to 255) with ▲/▼ and press MENU.
The menu returns to the COLOR TEMP menu.

(4) Repeat steps (2) and (3) to set the other gain items and press MENU.
The menu returns to the COLOR TEMP menu.

When you rename the adjusted color temperature, follow the steps below.

(5) Press ▲/▼ to move the cursor (▶) to "NAME SET" and press ENTER.
The following menu appears on the monitor screen.

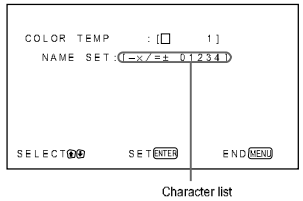

(6) Select the character to be changed with ▲/▼ and press ENTER.
The background of a character in the character list changes to cyan.

(7) Select a character in the character list with ▲/▼ and press ENTER.
The selected character is input.

(8) Repeat steps (6) and (7) until you finish inputting the name, then press MENU.
The menu returns to the COLOR TEMP menu.

SHARPNESS

You can change the outline correction level to one of three levels (HIGH, MID or LOW).

1 Press ▲/▼ to move the cursor (▶) to "SHARPNESS" and press ENTER.

2 Select the outline correction level with ▲/▼ and press ENTER.
HIGH: sharper picture
MID: standard value
LOW: softer picture

Notes

- CHROMA and PHASE controls do not function with an RGB signal.
- PHASE control does not function with a component signal.
- PHASE control does not function with a PAL or SECAM color source.
- Do not change the CHROMA/PHASE (NTSC only) level when the selected signal is black-and-white. Although it has no effect on the current picture, it does affect the picture of color signals such as NTSC or PAL which may be input later.

Restoring the PIC CONTROL Menu Items to Their Original Settings

1 In the PIC CONTROL menu, Press ▲/▼ to move the cursor (▶) to "RESET" and press ENTER.
The following menu appears on the monitor screen.

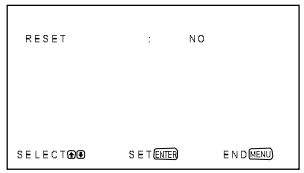

2 Press ▲/▼.
"NO" changes to "YES".

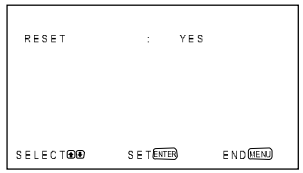

3 Press ENTER.
The PIC CONTROL menu items are restored.

To cancel the reset function
Press MENU before pressing ENTER.

Resizing and Positioning the Picture

You can shift the position of the picture so that it fits the screen, or adjust the vertical and horizontal size of the picture separately.

Resizing the Picture

1 Press MENU.
The main menu appears on the monitor screen.

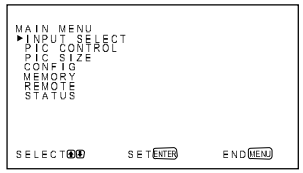

2 Press ▲/▼ to move the cursor (►) to "PIC SIZE" and press ENTER.
The PIC SIZE menu appears on the monitor screen.

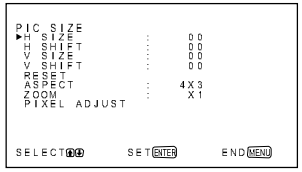

3 Press ▲/▼ to move the cursor (►) to "H SIZE" and press ENTER.
The following menu appears on the monitor screen.

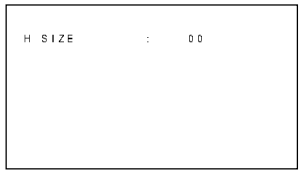

4 Press ▲/▼ to resize the picture.
▲: to increase the horizontal size
▼: to reduce the horizontal size
The horizontal picture size is indicated on the monitor screen in the range from MIN (50) to MAX (+50). The factory preset value is 00.

Note
The lower limit of the setting may be above the MIN depending on the input signal type.

5 Press ENTER.
The menu returns to the PIC SIZE menu.

6 Press ▲/▼ to move the cursor (►) to "V SIZE" and press ENTER.
The following menu appears on the monitor screen.

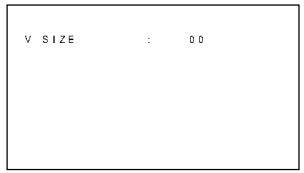

7 Press ▲/▼ to resize the picture.
▲: to increase the vertical size
▼: to reduce the vertical size
The vertical picture size is indicated on the monitor screen in the range from MIN (50) to MAX (+50). The factory preset value is 00.

8 Press ENTER.
The menu returns to the PIC SIZE menu.

Adjusting the Picture Position

1 In the PIC SIZE menu, press ▲/▼ to move the cursor (►) to "H SHIFT" and press ENTER.
The following menu appears on the monitor screen.

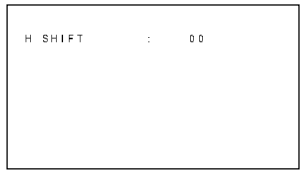

2 Press ▲/▼ to shift the picture.
▲: to shift the picture to the right
▼: to shift the picture to the left
The horizontal picture position is indicated on the monitor screen in the range from MIN (50) to MAX (+50). The factory preset value is 00.

3 Press ENTER.
The menu returns to the PIC SIZE menu.

4 Press ▲/▼ to move the cursor (►) to "V SHIFT" and press ENTER.
The following menu appears on the monitor screen.

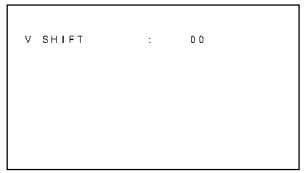

5 Press ▲/▼ to shift the picture.
▲: to shift the picture upward
▼: to shift the picture downward
The vertical picture position is indicated on the monitor screen in the range from MIN (50) to MAX (+50). The factory preset value is 00.

6 Press ENTER.
The menu returns to the PIC SIZE menu.

Restoring the Original Picture Size and Position

1 In the PIC SIZE menu, press ▲/▼ to move the cursor (►) to "RESET" and press ENTER.
The following menu appears on the monitor screen.

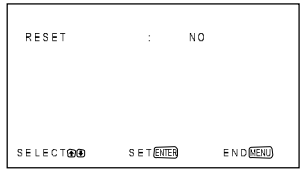

2 Press ▲/▼.
"NO" changes to "YES".

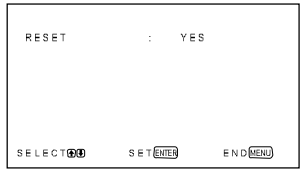

3 Press ENTER.
The original picture size and position are restored.

To cancel the reset function
Press MENU before pressing ENTER.

Changing the Aspect Ratio

This monitor can display images in various aspect ratios, such as the normal 4:3 TV program ratio, a widescreen image, etc. That means you can choose a suitable aspect ratio to display images.

1 In the PIC SIZE menu, press ▲ / ▼ to move the cursor (▶) to "ASPECT" and press ENTER.
The following menu appears on the monitor screen.

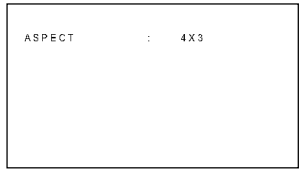

2 Select an aspect ratio item with ▲ / ▼ and press ENTER.
4×3: to display a standard 4:3 image
16×9: to display a 16:9 widescreen image
W ZOOM: to enlarge a 4:3 image to a 16:9 screen naturally as illustrated below
LB (letterbox) ZOOM: to enlarge images in various aspect ratios to fit proportionally to the left and right sides of the screen as illustrated below

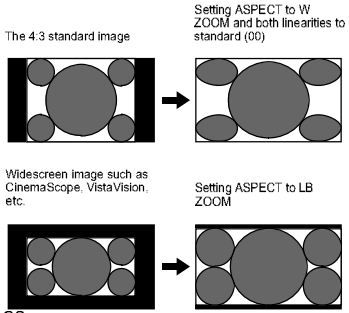

Notes

- If you select W ZOOM or LB ZOOM, it is recommended that you set the H SIZE, H SHIFT, V SIZE and V SHIFT to the standard (00) . If you change them too much, a W ZOOM or LB ZOOM display may be distorted. Before you select W ZOOM or LB ZOOM, set ZOOM to ×1. If ZOOM is set to ×2, ×3 or ×4, W ZOOM or LB ZOOM cannot be selected.
- Black bands may display at the top and bottom of the screen depending on the input signal type.

Adjusting the Linearities

When you select W ZOOM for ASPECT, you can change the linearities by adjusting the H LINEARITY and V LINEARITY settings.

1 In the ASPECT menu, press ▲ / ▼ to move the cursor (▶) to "W ZOOM" and press ENTER.
The following menu appears on the monitor screen.

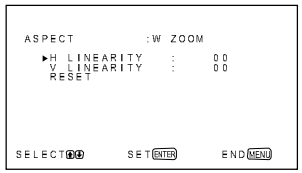

2 Press ▲ / ▼ to move the cursor (▶) to "H LINEARITY" or "V LINEARITY" and press ENTER.
H LINEARITY: to change the linearity in the horizontal direction
V LINEARITY: to change the linearity in the vertical direction

The following menu appears on the monitor screen. (The illustration below is for selecting H LINEARITY.)

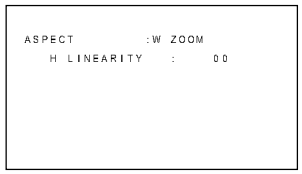

3 Adjust the linearity with ▲ / ▼.

To restore wide zoom mode items to their original settings
In the ASPECT menu, select W ZOOM and press ENTER. Press ▲ / ▼ to move the cursor (▶) to "RESET" and press ENTER. Then select YES with ▲ / ▼ and press ENTER.

Adjusting the Pixels

If there is too much noise on the edges of the characters or the vertical lines, you can adjust the dot phase and the total number of horizontal pixels.

1 Press MENU.
The main menu appears on the monitor screen.

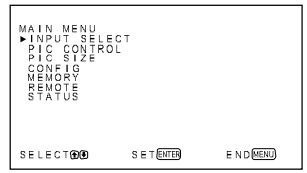

2 Press ▲ / ▼ to move the cursor (▶) to "PIC SIZE" and press ENTER.
The PIC SIZE menu appears on the monitor screen.

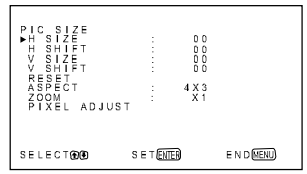

3 Press ▲ / ▼ to move the cursor (▶) to "PIXEL ADJUST" and press ENTER.
The following menu appears on the monitor screen.

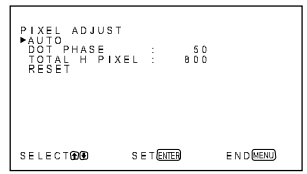

4 You can adjust the dot phase and the total number of horizontal pixels automatically or manually.

Adjusting automatically

(1) Select AUTO with ▲/▼ and press ENTER.
The following menu appears on the monitor screen.

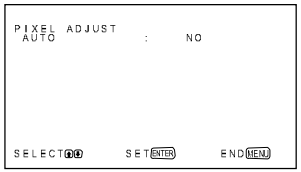

(2) Select YES with ▲/▼ and press ENTER.
The dot phase and the total number of horizontal pixels are adjusted automatically.

Adjusting manually

(1) Select DOT PHASE or TOTAL H PIXEL with ▲/▼ and press ENTER.
The following menu appears on the monitor screen. (The illustration below is for selecting DOT PHASE.)

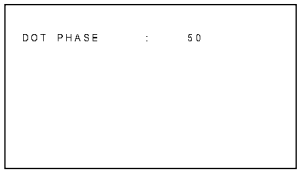

(2) Adjust the dot phase or the total number of horizontal pixels with ▲/▼ and press ENTER.

To restore PIXEL ADJUST menu items to their original settings

In the PIXEL ADJUST menu, press ▲/▼ to move the cursor (▶) to "RESET" and press ENTER. Then select YES with ▲/▼ and press ENTER.

Using the Memory Function

You can save the current picture setting for each input signal using the MEMORY function. The saved settings can be restored whenever necessary. The items in the PIC CONTROL and PIC SIZE menus can be memorized. You can save the picture settings of up to twenty input signals. You can name the settings of the items (up to 10 characters in length).

Storing the Current Setting

1 Press MENU.
The main menu appears on the monitor screen.

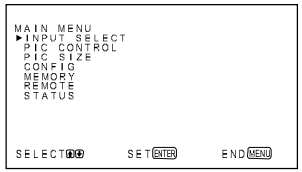

2 Press ▲/▼ to move the cursor (▶) to "MEMORY" and press ENTER.
The MEMORY menu appears on the monitor screen.

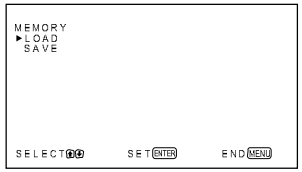

3 Press ▲/▼ to move the cursor (▶) to "SAVE" and press ENTER.
The following menu appears on the monitor screen.

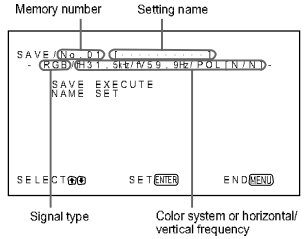

If there is no data in the selected memory number, the " EMPTY " message appears on the monitor screen in cyan. The signal type and the color system or horizontal/vertical frequency are displayed in cyan (showing that the signal type of the selected memory number is the same as that of the current setting) or in yellow (showing that the signal type of the selected memory number is not the same as that of the current setting).

4 Select a memory number (01 to 20) with ▲/▼ and press ENTER.
The cursor (▶) appears on the monitor screen.

5 Press ▲/▼ to move the cursor (▶) to "SAVE EXECUTE" and press ENTER.
The current data is stored under the selected memory number. The "SAVE COMPLETED" message appears for about five seconds.
When you name the setting, follow the steps below.

6 Press ENTER, then press ▲/▼ to move the cursor (▶) to "NAME SET" and press ENTER again.
The following menu appears on the monitor screen.

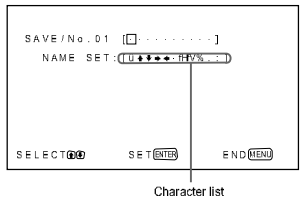

7 Select the character to be changed with ▲/▼ and press ENTER.
The background of a character in the character list changes to cyan.

8 Select a character in the character list with ▲/▼ and press ENTER.
The selected character is input.

9 Repeat steps **7** and **8** until you finish inputting the name, then press MENU.
The menu returns to the SAVE menu.

Note

If the storing of the setting fails, the "SAVE ERROR" message appears on the monitor screen. Try to store the setting again.

Calling Up a Stored Setting

1 In the MEMORY menu, press ▲/▼ to move the cursor (▶) to "LOAD" and press ENTER.
The first page of the stored settings appears on the monitor screen.

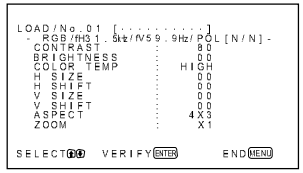

2 Select a memory number (01 to 20) with ▲/▼ and press ENTER.
The second page of the stored settings appears on the monitor screen.

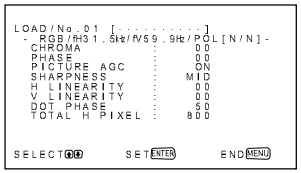

The signal type and the color system or horizontal/vertical frequency are displayed in cyan (showing that the signal type of the selected memory number is the same as that of the current setting and you can call up the stored setting) or in red (showing that the signal type of the selected memory number is not the same as that of the current setting and you cannot call up the stored setting).

3 Press ENTER.
The "LOAD COMPLETED" message appears for about five seconds and the picture is adjusted to the selected setting.

Note

If the loading fails, the "LOAD ERROR" message appears on the monitor screen. Try to load the setting again.

Selecting the On-screen Language

You can select the on-screen language from among English, German, French, Italian, Spanish or Japanese.

1 Press MENU.
The main menu appears on the monitor screen.

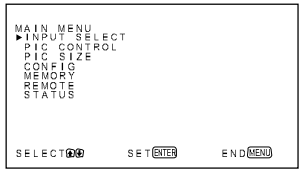

2 Press ▲/▼ to move the cursor (►) to "CONFIG" and press ENTER.
The CONFIG (1/2) menu appears on the monitor screen.

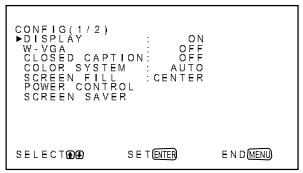

3 Press ▲/▼ to move the cursor (►) to "LANGUAGE" on the CONFIG (2/2) menu and press ENTER.
The following menu appears on the monitor screen.

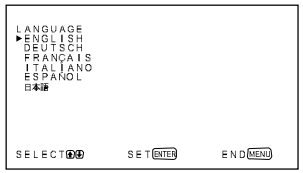

4 Press ▲/▼ to move the cursor (►) to the desired language and press ENTER.
The on-screen language is switched to the one you selected.
ENGLISH: English
DEUTSCH: German
FRANÇAIS: French
ITALIANO: Italian
ESPAÑOL: Spanish
日本語**:** Japanese

5 Press MENU.
The menu returns to the CONFIG (2/2) menu.

Reducing Afterimage/ Ghosting (Screen Saver Function)

If a bright image that does not change is displayed on a screen (e.g., a PC screen) for a long time, an afterimage (ghosting) may occur. To reduce this afterimage, this monitor has a screen saver function. The screen saver function has two screen savers. One screen saver reverses the image (PIC INVERSION) while the other automatically changes the display position (PIC ORBITING).

Reversing the Image

1 Press MENU.
The main menu appears on the monitor screen.

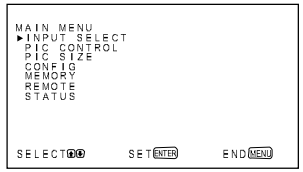

2 Press ▲/▼ to move the cursor (►) to "CONFIG" and press ENTER.
The CONFIG (1/2) menu appears on the monitor screen.

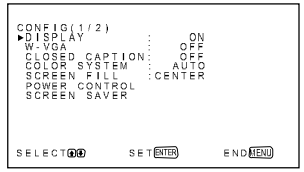

3 Press ▲/▼ to move the cursor (►) to "SCREEN SAVER" and press ENTER.
The following menu appears on the monitor screen.

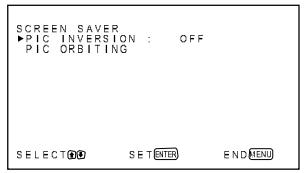

4 Press ▲/▼ to move the cursor (►) to "PIC INVERSION" and press ENTER.
The following menu appears on the monitor screen.

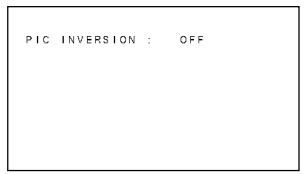

5 Select the PIC INVERSION mode with ▲/▼.
OFF: to set the PIC INVERSION to OFF
ON: to set the PIC INVERSION to ON
AUTO: Carry out the PIC INVERSION process once a day.

When you select AUTO, the following menu appears.

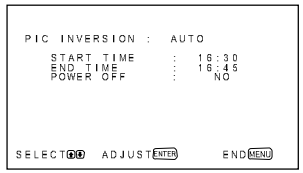

(1) Press ENTER.
The cursor (▶) appears on the monitor screen.

(2) Press ▲/▼ to move the cursor (▶) to "START TIME" and press ENTER.
The following menu appears and the background of the hour is displayed in cyan.

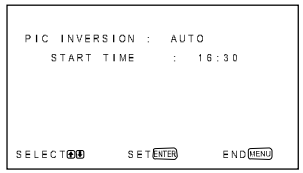

(3) Set the hour when the image is to be reversed with ▲/▼ and press ENTER.
The setting for the hour is entered and the background of the minute is displayed in cyan.

(4) Set the minute with ▲/▼ and press MENU.
The setting for the minute is entered and the menu returns to the PIC INVERSION menu.

(5) Similarly, set the time when the PIC INVERSION function is to be cancelled.
The display will be reversed at the START TIME and will return to the original display at the END TIME. This cycle is carried out automatically once a day.

To set the change to the standby mode at the END TIME

1 After selecting AUTO for PIC INVERSION mode, select POWER OFF and press ENTER.
The following menu appears on the monitor screen.

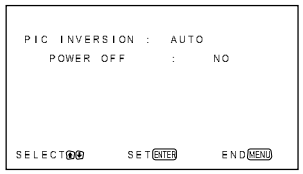

2 Select YES with ▲/▼ and press MENU.
The monitor changes to standby mode at the designated END TIME.

Notes

- The power off function, power saving function and on/off timer function in the POWER CONTROL menu cannot be used simultaneously. When one of those functions is set to ON (YES), " " appears next to the others and their functions are not available.
- If you set START TIME and END TIME to the same time, the setting of START TIME takes priority over that of END TIME. The display does not return to the original display at the END TIME.

Changing the Display Position Automatically

1 In the SCREEN SAVER menu, press ▲/▼ to move the cursor (▶) to "PIC ORBITING" and press ENTER.
The following menu appears on the monitor screen.

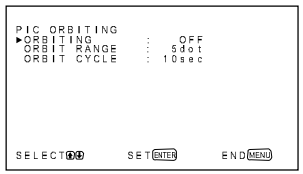

2 Press ▲/▼ to move the cursor (▶) to "ORBITING" and press ENTER.
The following menu appears on the monitor screen.

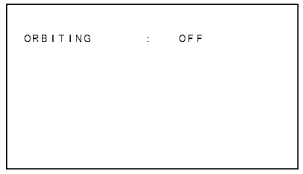

3 Select the ORBITING mode with ▲/▼.
OFF: Cancel the PIC ORBITING function.
ON: Set the PIC ORBITING function.

4 Press MENU.
The menu returns to the PIC ORBITING menu.

5 Select ORBIT RANGE (moving distance) or ORBIT CYCLE (time) with ▲/▼ and press ENTER.
The following values can be selected:
ORBIT RANGE: 5dot, 10dot, 15dot, 20dot
ORBIT CYCLE: 10sec, 30sec, 1min, 5min

The following menu appears on the monitor screen. (The illustration below is for selecting ORBIT RANGE.)

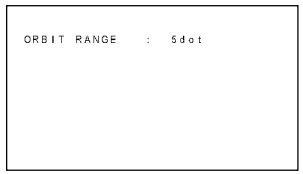

6 Adjust the ORBIT RANGE or ORBIT CYCLE with ▲/▼ and press MENU.

When both PIC INVERSION and PIC ORBITING are set to ON
If the PIC ORBITING function is actuated while the picture is reversed, the reversed picture is displayed changing position.

Controlling Power On/Off Automatically (Power Control Function)

This monitor has two power controlling functions. You can set it to turn off the power automatically after a certain period if there is no input signal from the INPUT1 or INPUT2 connectors (POWER SAVING function). You can set the time when the power automatically turns on/off (ON/OFF TIMER function).

Power Saving Function

1 Press MENU.
The main menu appears on the monitor screen.

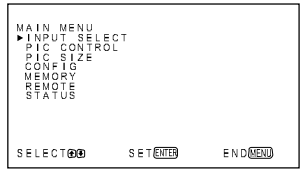

2 Press ▲/▼ to move the cursor (▶) to "CONFIG" and press ENTER.
The CONFIG (1/2) menu appears on the monitor screen.

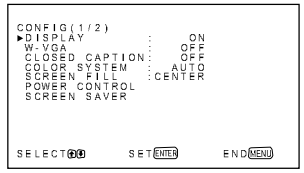

3 Press ▲ / ▼ to move the cursor (▶) to "POWER CONTROL" and press ENTER.
The following menu appears on the monitor screen.

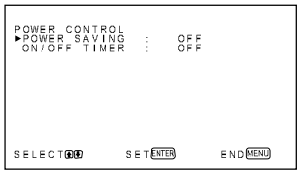

4 Press ▲ / ▼ to move the cursor (▶) to "POWER SAVING" and press ENTER.
The following menu appears on the monitor screen.

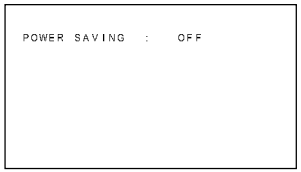

5 Press ▲ / ▼ to select the length of time until the change to power saving mode.
OFF: The power saving function does not work.
5min: Changes to the power saving mode after five minutes if there is no input signal.
10min: Changes to the power saving mode after 10 minutes if there is no input signal.

The ON indicator flashes when the unit is in the power saving mode.

To cancel the power saving function

- Input the sync signal again.
- Press the ⏻ switch on the ⏻ (standby) switch / indicator section or the POWER ON switch on the Remote Commander.

Signal specification for using the power saving function

The sync signal should be connected to the 13th pin of the RGB/YUV (D-sub 15-pin) connector in the INPUT1 or INPUT2 connectors.

On/Off Timer Function

1 In the CONFIG (1/2) menu, Press ▲ / ▼ to move the cursor (▶) to "POWER CONTROL" and press ENTER.
The following menu appears on the monitor screen.

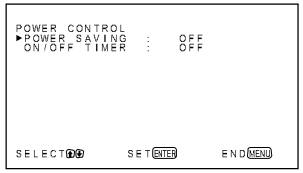

2 Press ▲ / ▼ to move the cursor (▶) to "ON/OFF TIMER" and press ENTER.
The following menu appears on the monitor screen.

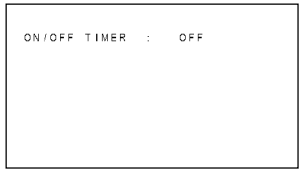

3 Select ON with ▲ / ▼ and press ENTER.
The following menu appears on the monitor screen.

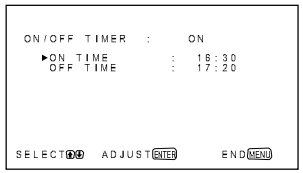

4 Press ▲ / ▼ to move the cursor (▶) to "ON TIME" and press ENTER.
The following menu appears and the background of the hour is displayed in cyan.

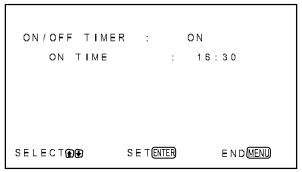

5 Set the hour with ▲ / ▼ and press ENTER.
The setting for the hour is entered and the background of the minute is displayed in cyan.

6 Set the minute with ▲ / ▼ and press MENU.
The setting for the minute is entered and the menu returns to the ON/OFF TIMER menu.

7 Similarly, set the OFF TIME.

The ON indicator flashes when the OFF TIME is reached, and the monitor turns off.

Notes

- The power saving function does not work when the signal is input from the VIDEO connectors.
- If the sync signal is not connected to the 13th pin of the RGB/YUV (D-sub 15-pin) connector in the INPUT1 or INPUT2 connectors, the monitor does not turn on even if the sync signal is input. Be sure to set POWER SAVING to OFF when only an RGB signal is connected.
- The power saving function, on/off timer function and power off function in the PIC INVERSION mode cannot be used simultaneously. When one of those functions is set to ON (YES), " " appears next to the others and their functions are not available.
- If you set ON TIME and OFF TIME to the same time, the setting of ON TIME takes priority over that of OFF TIME. The monitor does not turn off at the OFF TIME.

Self-diagnosis Function

The unit has a self-diagnosis function.
This function displays the monitor's condition based on the pattern shown by the flashing of the STANDBY indicator. The flashing pattern informs you of the monitor's current condition.
If the STANDBY indicator flashes, check the number of flashes and contact your authorized Sony dealer.

1 Check the flashing pattern of the STANDBY indicator.
The indicator flashes (with an image showing on the monitor) or flashes at intervals of three seconds (with no image showing on the monitor). Count the number of flashes if the indicator flashes at intervals of three seconds. For example, the indicator flashes twice, followed by a three second pause, two more flashes and this pattern repeats. In this case, the count for the number of flashes is two.

2 Unplug the unit.
Inform your authorized Sony dealer of the number of flashes.

Operating a Specific Monitor With the Remote Commander

Using the supplied Remote Commander, you can operate a specific monitor without affecting other monitors that are installed at the same time.

1 Press ID MODE ON on the Remote Commander.
Monitor index numbers appear in white characters on all the monitors. (Every monitor is allocated an individual preset index number from 1 to 255.)
See "To change the index number" in the right-hand column on the next page to change the index number.

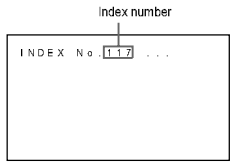

2 Input the index number of the monitor you want to operate using the 0 9 buttons on the Remote Commander.
The input number appears right next to the index number of each monitor.

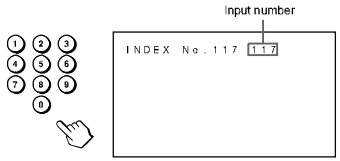

3 Press ID MODE SET.
The character on the selected monitor changes to cyan while the others change to red.

You can operate only the monitor specified. (All operations are available in ID mode except power on/off.)

4 After the necessary adjustment, press ID MODE OFF.
The monitor returns to the normal mode.

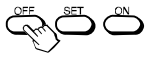

To change the index number

You can change the index number if necessary.
When you change the number, use the buttons on the control button section of the monitor.

1 Press MENU.
The main menu appears on the monitor screen.

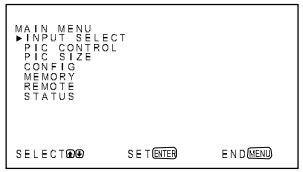

2 Press ▲/▼ to move the cursor (►) to "REMOTE" and press ENTER.
The REMOTE menu appears on the monitor screen.

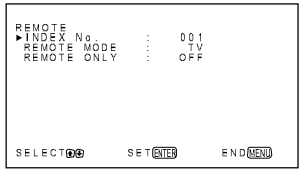

3 Press ▲/▼ to move the cursor (►) to "INDEX No." and press ENTER.
The following menu appears on the monitor screen.

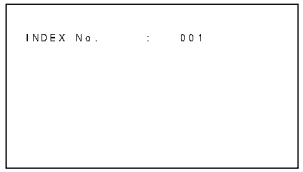

4 Select the index number with ▲/▼ and press ENTER.
The menu returns to the REMOTE menu.

Using Other Remote Commander Models

The following operations can be carried out using other Remote Commander models.
- Power on/off
- Input selection
- Menu operations
- Picture adjustments: contrast, phase and chroma
- On-screen display on/off

The operations available and the buttons to be used for each operation are limited depending on each Remote Commander. See the table below.

Remote Commander model		RM-854	RM-921	RM-1271	RM-PJ1292	RM-PJ1000
REMOTE MODE setting		TV	TV	PJ	PJ	PJ
Input selection	INPUT1	RGB	RGB1	A	A	A
	INPUT2	—	RGB2	B	B	B
	VIDEO	LINE1	LINE	VIDEO	VIDEO	VIDEO
Menu operation	MENU	MENU	MENU	PAGE or ←	PAGE or ←	MENU or ←
	ENTER	ENTER	ENTER	→	→	ENTER or →
	▲	+	SELECT+↑	↑	↑	↑
	▼	–	SELECT–↓	↓	↓	↓
Picture adjustment	Contrast	CONTRAST+/–	—	CONTR+/–	CONTR+/–	CONTR+/–
	Chroma	CHROMA+/–	—	COLOR+/–	COLOR+/–	COLOR+/–
	Phase	PHASE+/–	—	HUE+/–	HUE+/–	HUE+/–
On-screen information		DISPLAY	DISPLAY	—	STATUS ON	STATUS ON

Specifications

Video processing

Preset signal	*See page 21 (GB).*
Sampling rate	13.5 MHz to 140 MHz
Panel system	AC-type Plasma Display Panel
Display resolution	1 024 dots (horizontal) × 1 024 lines (vertical)
Pixel pitch	0.90 (horizontal) × 0.51 (vertical) mm (1/16 × 1/32 inches)
Picture size	921 (horizontal) × 522 (vertical) mm (36 3/8 × 20 5/8 inches)
Panel size	42-inch (diagonal 1 058 mm)

Inputs and Outputs

INPUT1/INPUT2

RGB/YUV	D-sub 15-pin (female) *(See "Pin assignment" on page 39 (GB).)*
AUDIO	Stereo minijack 500 mVrms, high impedance

VIDEO (NTSC, PAL, SECAM, NTSC4.43, PAL60, PAL-M)[1)]

COMPOSITE IN	BNC-type (×1) Composite video, 1 Vp-p ±2 dB sync negative, 75-ohm (automatic termination)
Y/C IN	Mini DIN 4-pin type (×1) Y (luminance): 1 Vp-p ±2 dB sync negative, 75 ohms terminated C (chrominance): Burst 0.286 Vp-p ±2 dB (NTSC), 75 ohms terminated Burst 0.3 Vp-p ±2 dB (PAL), 75 ohms terminated
AUDIO IN	Stereo minijack 500 mVrms, high impedance
COMPOSITE OUT	BNC-type (×1) Loop-through
AUDIO OUT	Stereo minijack 500 mVrms, high impedance
REMOTE (RS-232C)	D-sub 9-pin type (×1)

Safety regulations
UL1950, CSA No. 950 (c-UL), FCC Class B, IC Class B, EN60 950 (NEMKO), CE, C-Tick

General

Power requirements
100 V to 240 V AC, 50/60 Hz, 4.5 A to 1.8 A

Power consumption
400 W

Operating conditions
Temperature: 0 °C to 35 °C (32 °F to 95 °F)
Humidity: 20% to 90% (no condensation)
Atmospheric pressure: 700 to 1 060 hPa

Storing/transporting conditions
Temperature: 10 °C to +40 °C (14 °F to 104 °F)
Humidity: 20% to 90% (no condensation)
Atmospheric pressure: 700 to 1 060 hPa

Dimensions
1 032 × 630 × 83 mm (40 3/4 × 24 7/8 × 3 3/8 inches) (w/h/d, excluding projections)

Mass
29.4 kg (64 lb 13 oz)

Supplied accessories
AC power cord (1)
AC plug holder (2)
Remote Commander RM-42B (1)
Size AA (R6) batteries (2)
Operating instructions (1)

Optional accessories
Monitor stand SU-42B
Video input adaptor BKM-B10 (for the PFM-42B1E only)

Design and specifications are subject to change without notice.

1) The PFM-42B1E is not equipped with VIDEO connectors. For the PFM-42B1E, composite video and Y/C input can be input to the monitor when the BKM-B10 video input adaptor (not supplied) is installed in the monitor.

Pin assignment

RGB/YUV connector (D-sub 15-pin)

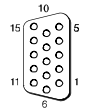

Pin No.	Signal
1	Red video or R-Y or P_R
2	Green video or Y
3	Blue video or B-Y or P_B
4	Ground
5	Ground
6	Red ground
7	Green ground
8	Blue ground
9	Not used
10	Ground
11	Ground
12	SDA
13	H sync or composite sync
14	V sync
15	SCL

Section 2
Service Informations

2-1. Board Layout

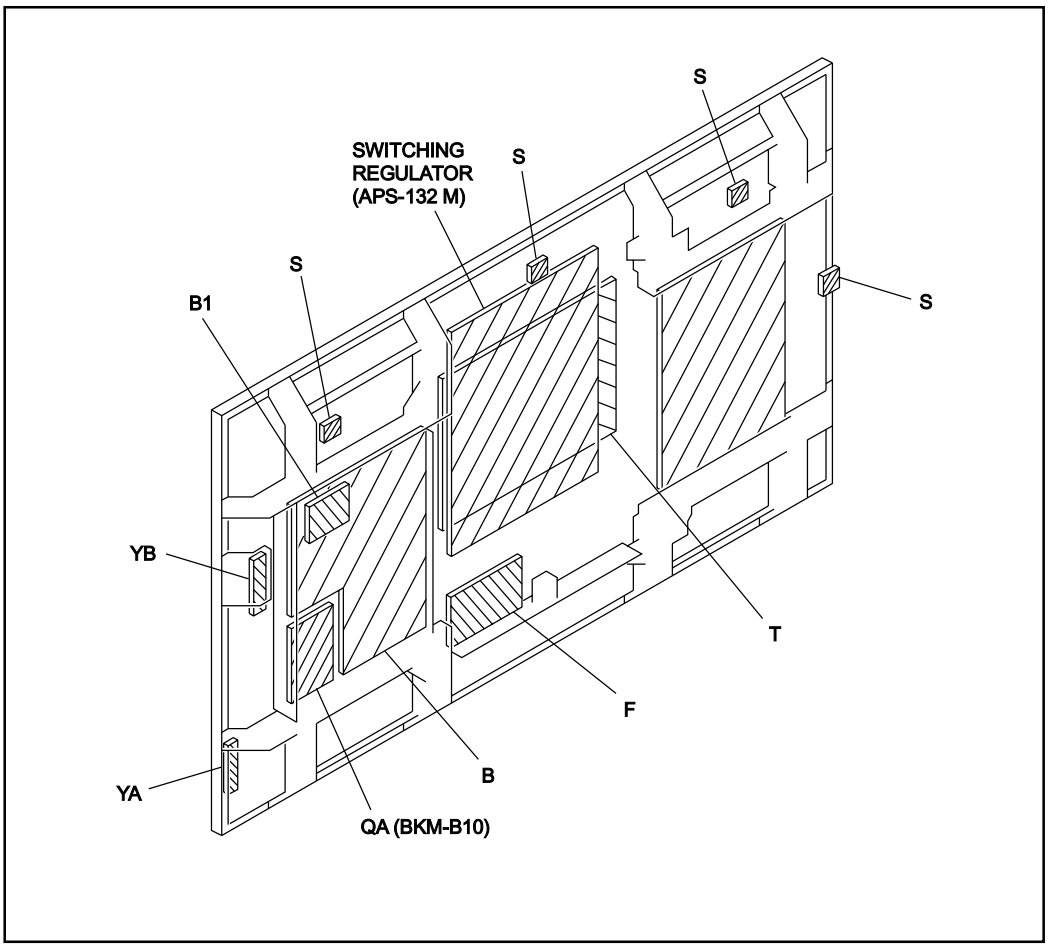

2-2. Disassembly

2-2-1. QA Board (BKM-B10) Removal

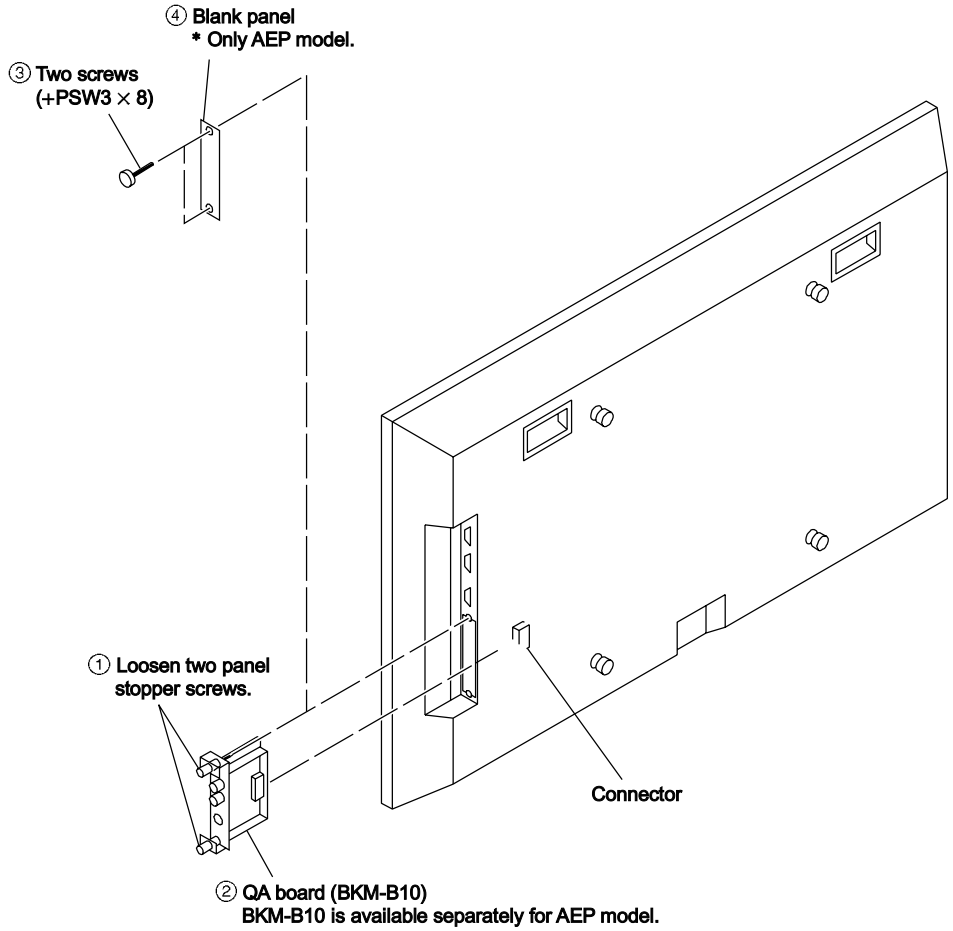

2-2-2. Rear Cover Assy Removal

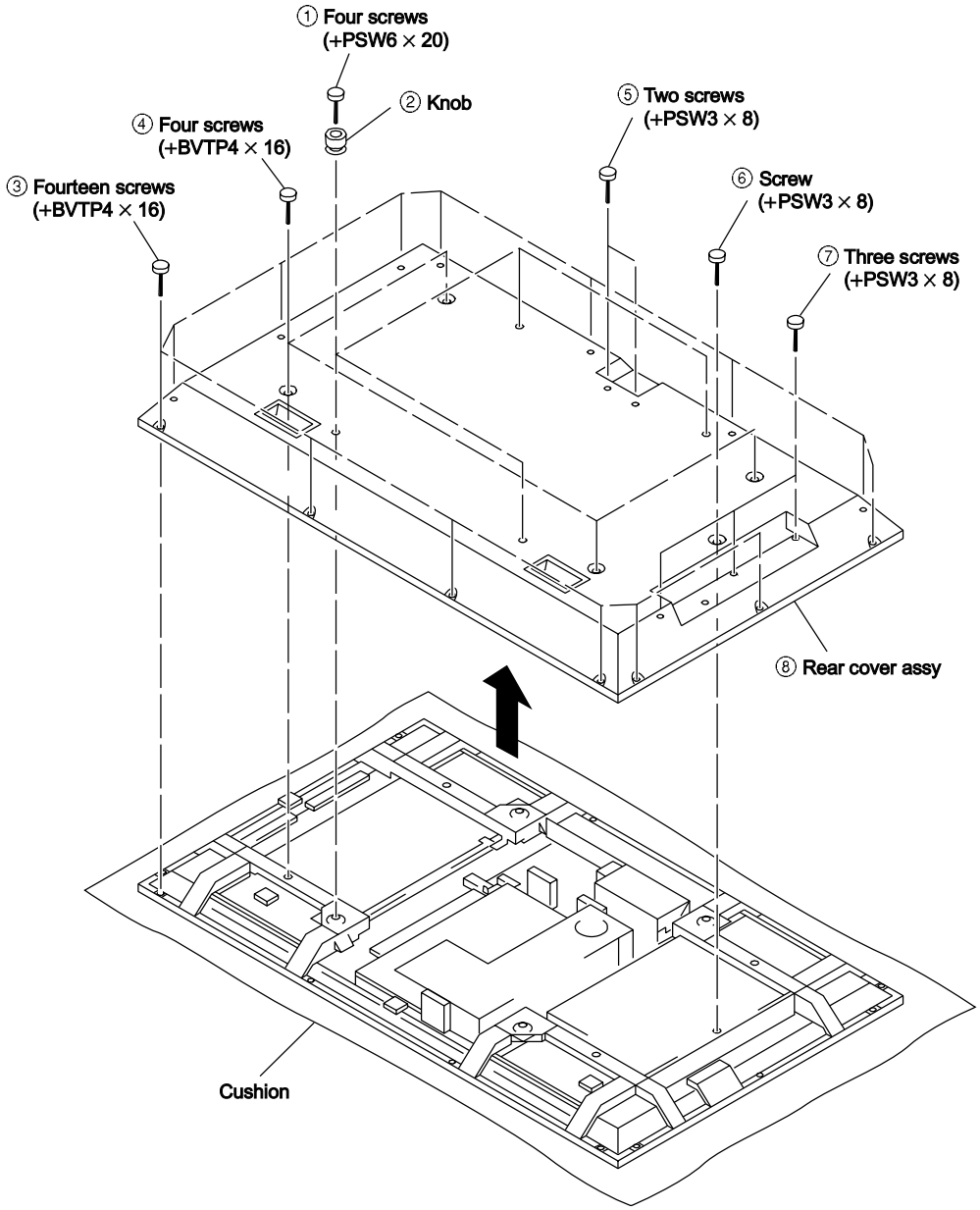

2-2-3. Bezel Assy and YA, YB Boards Removal

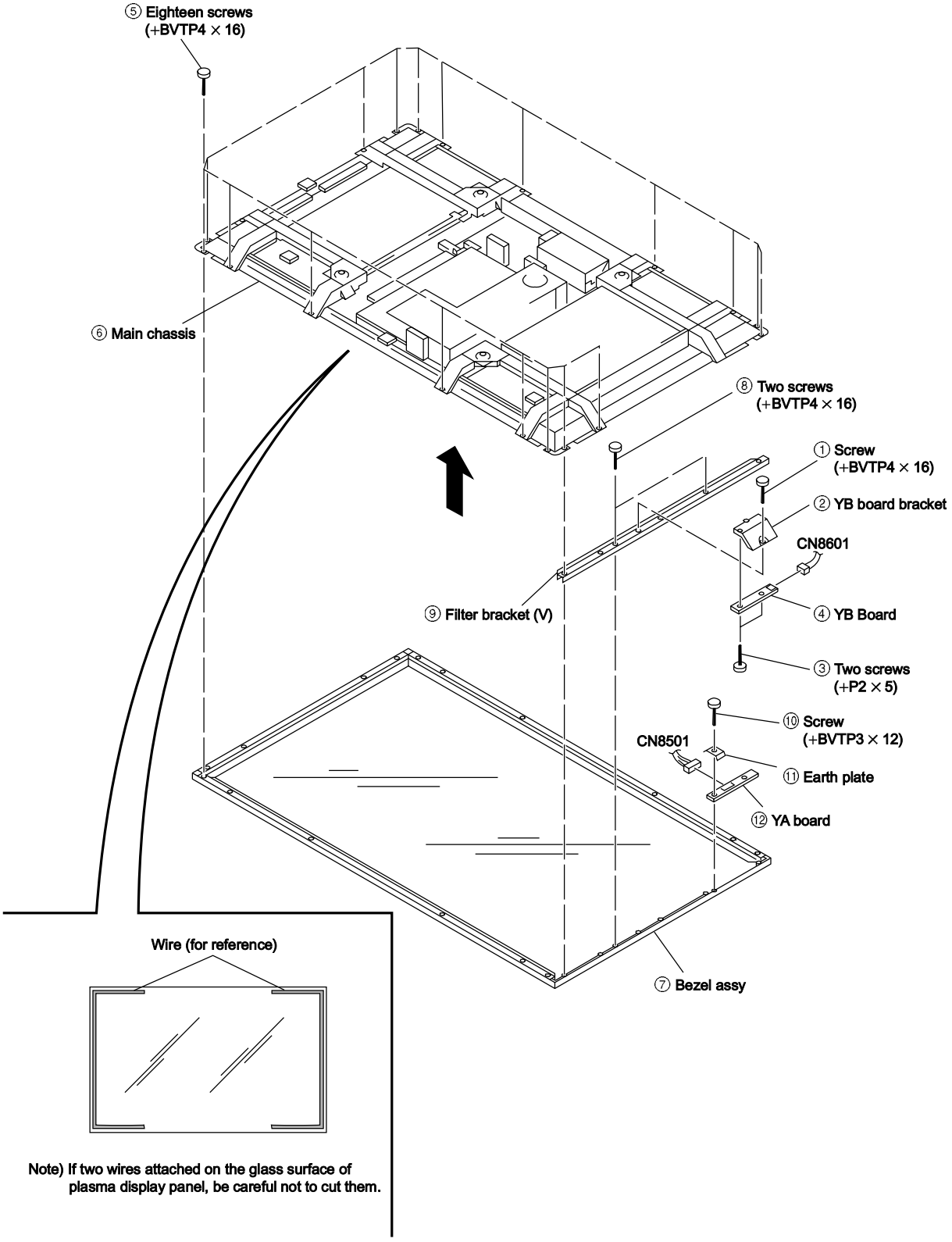

2-2-4. B Block Assy Removal

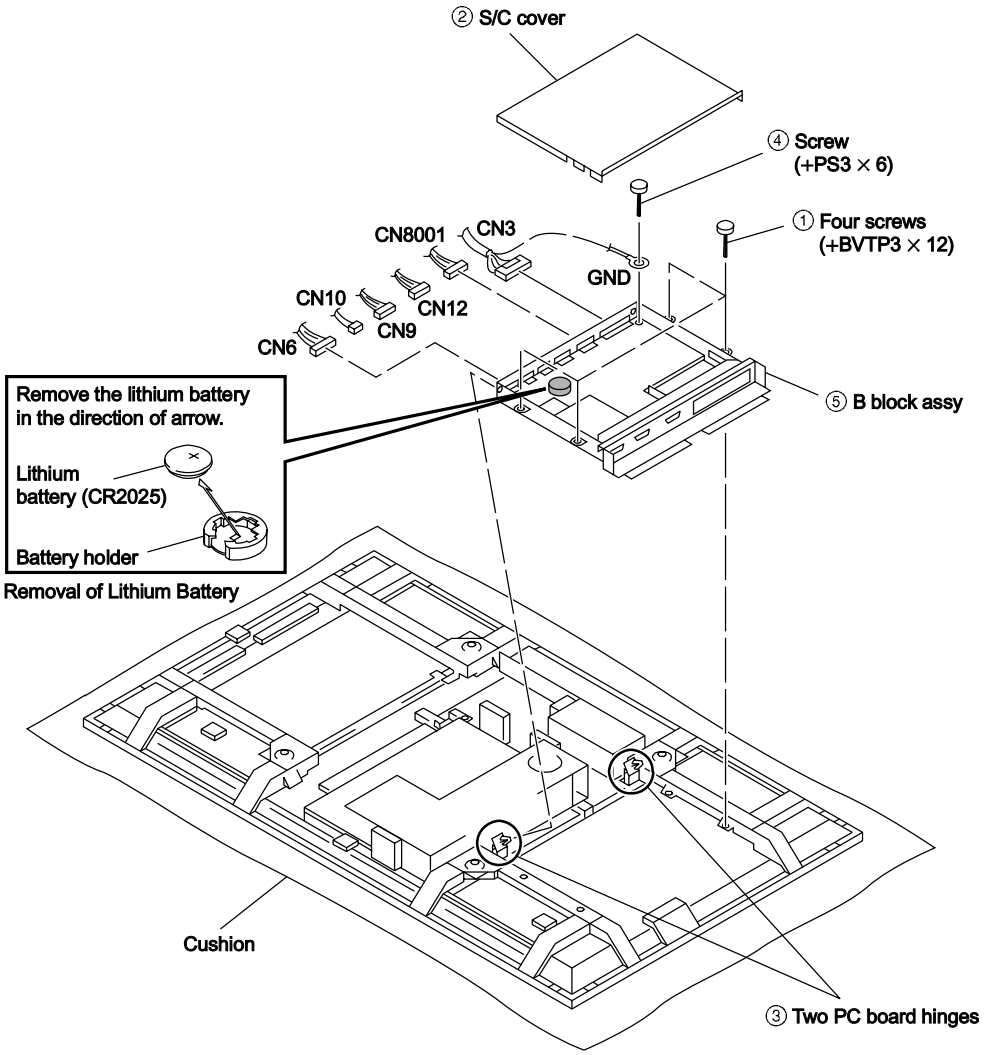

2-2-5. B and B1 Boards Removal

* Remove the B block assy. (Refer to 2-2-4.)

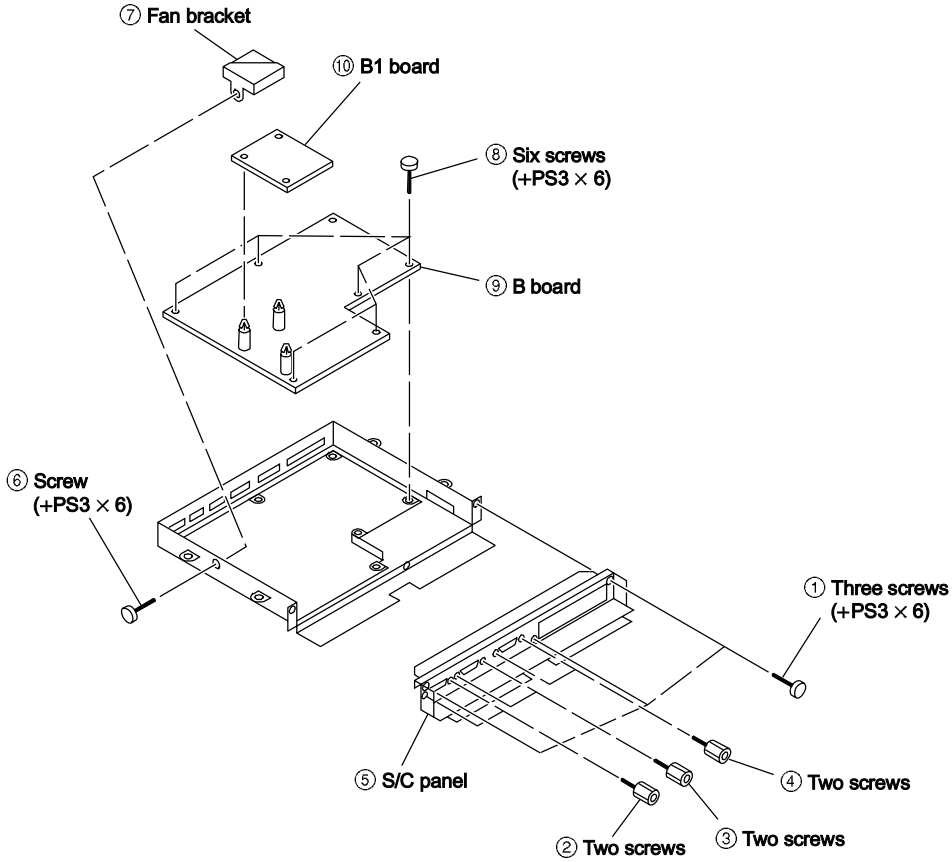

2-2-6. Extention Board Connection

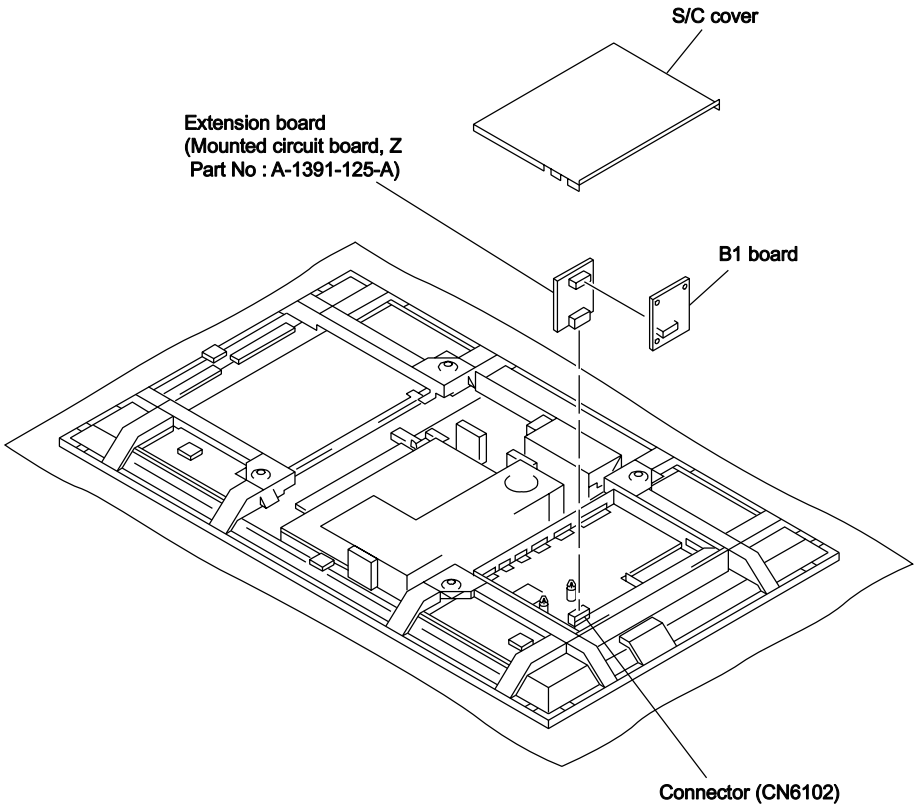

2-2-7. Power Supply Assy Removal

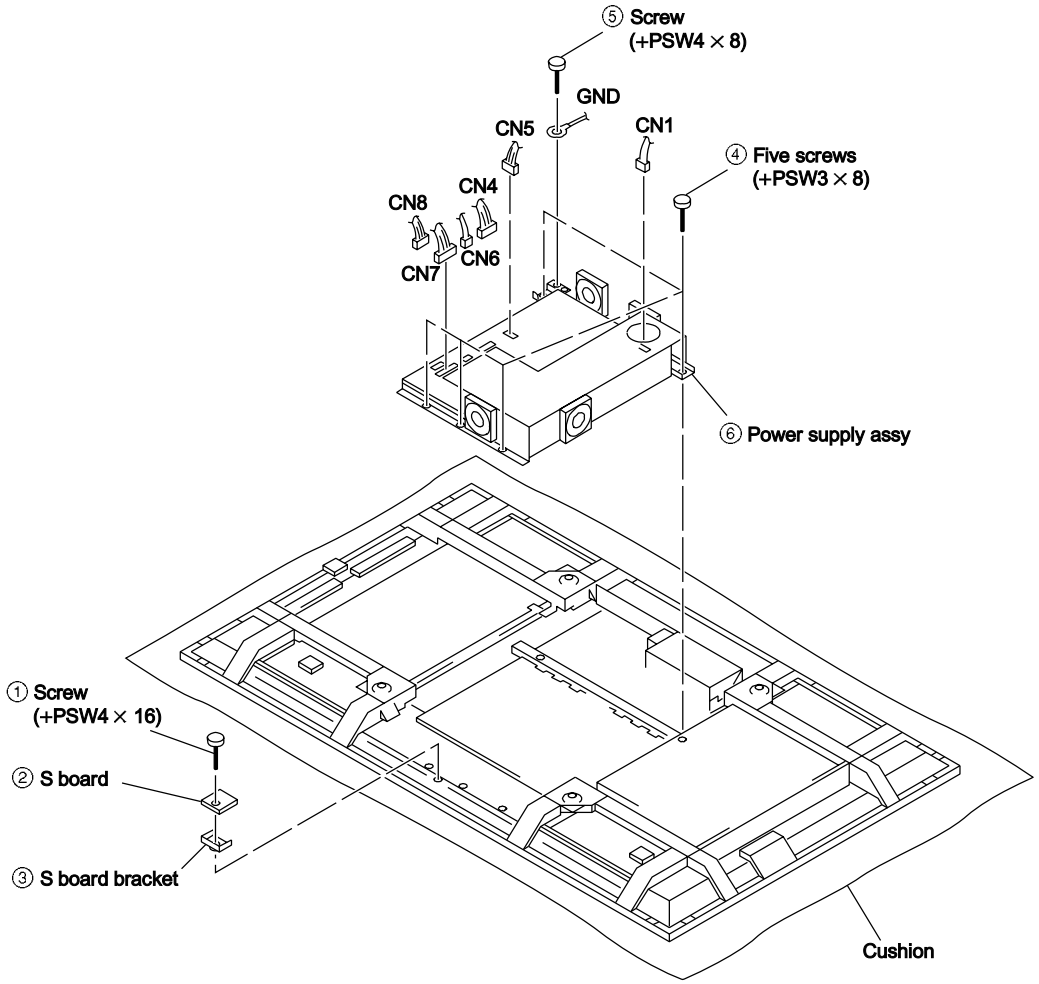

2-2-8. Switching Regulator (APS-132 M board) Removal

* Remove the Power supply assy. (Refer to 2-2-7.)

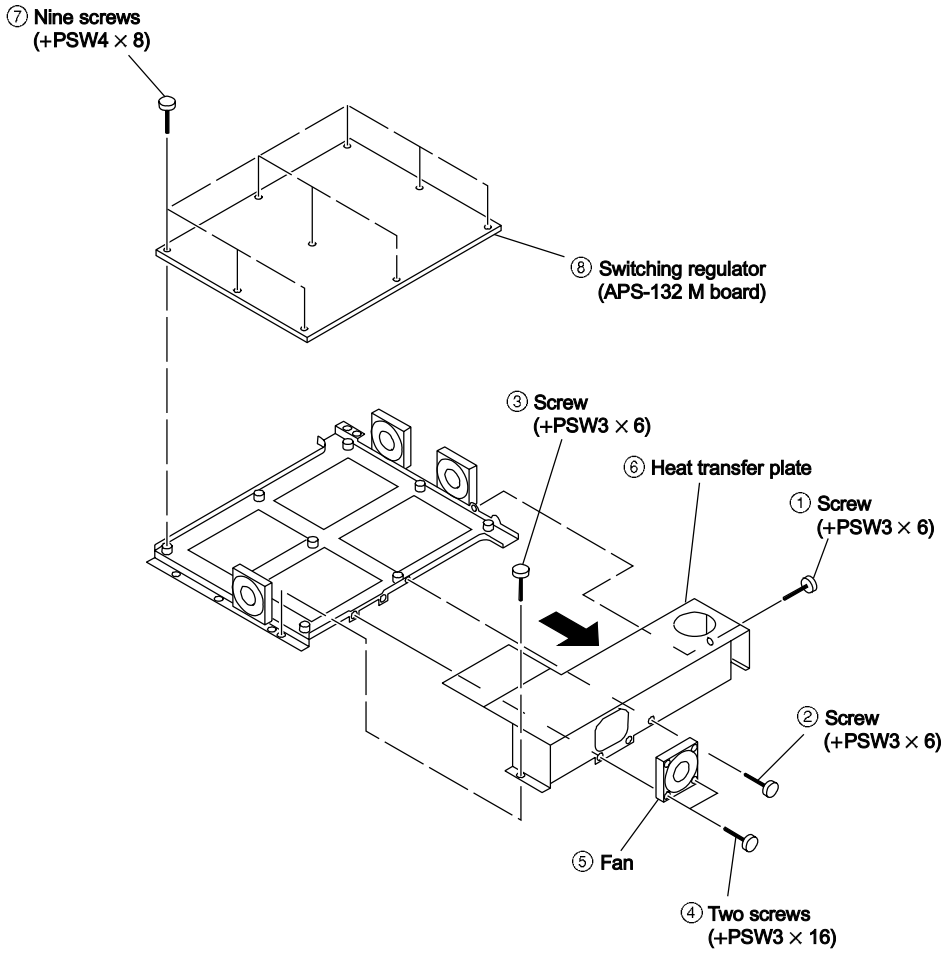

2-2-9. T Board Removal

* Remove the Power supply assy. (Refer to 2-2-7.)

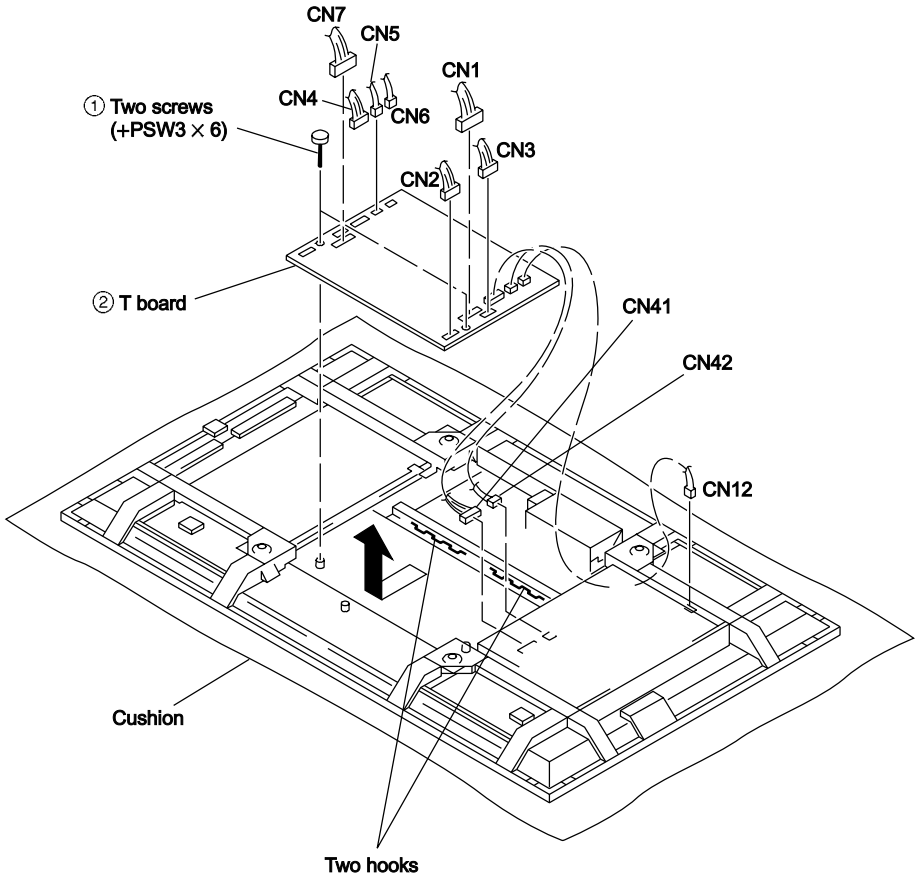

2-2-10. Plasma Display Panel Unit Removal (1/2)

* Remove the Bezel assy. (Refer to 2-2-3.)
* Remove the B block assy. (Refer to 2-2-4.)
* Remove the Power supply assy. (Refer to 2-2-7.)
* Remove the T board. (Refer to 2-2-9.)

Remove those parts according to numbers ① through ⑳.

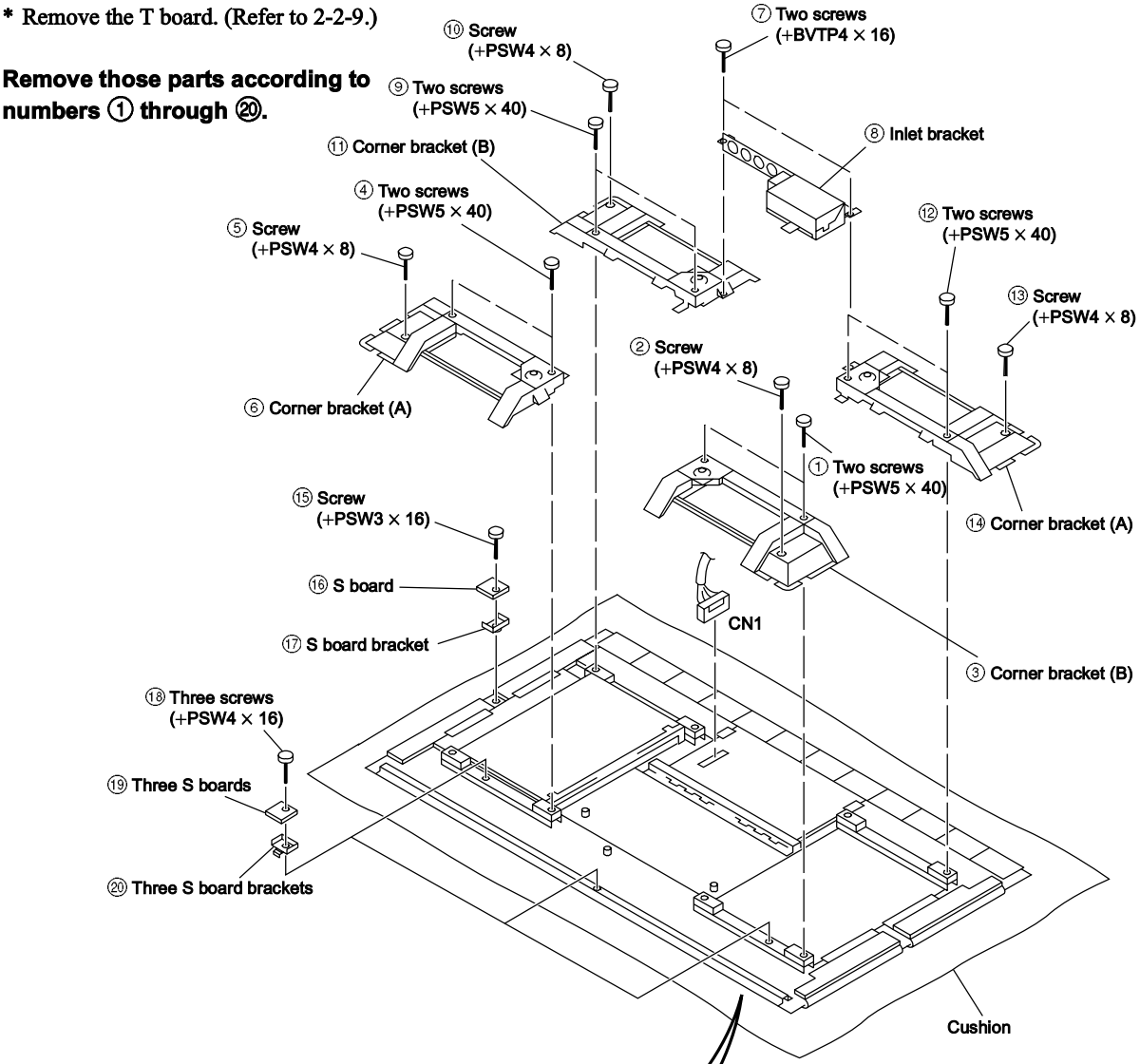

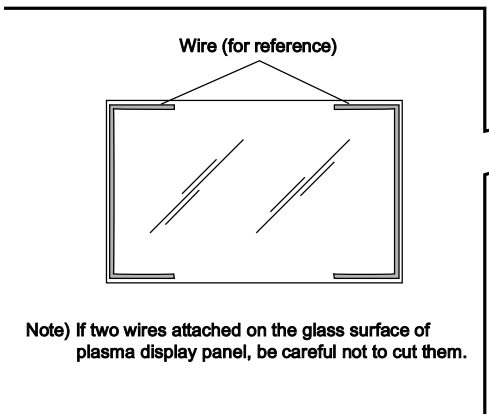

Note) If two wires attached on the glass surface of plasma display panel, be careful not to cut them.

2-2-10. Plasma Display Panel Unit Removal (2/2)

Remove the parts according to numbers ㉑ through ㉕.
Change toward of the DC/DC converter as shown.
Attach the DC/DC converter according to numbers ㉖ through ㉚.
After that, pack it according to the item 2-2-11.

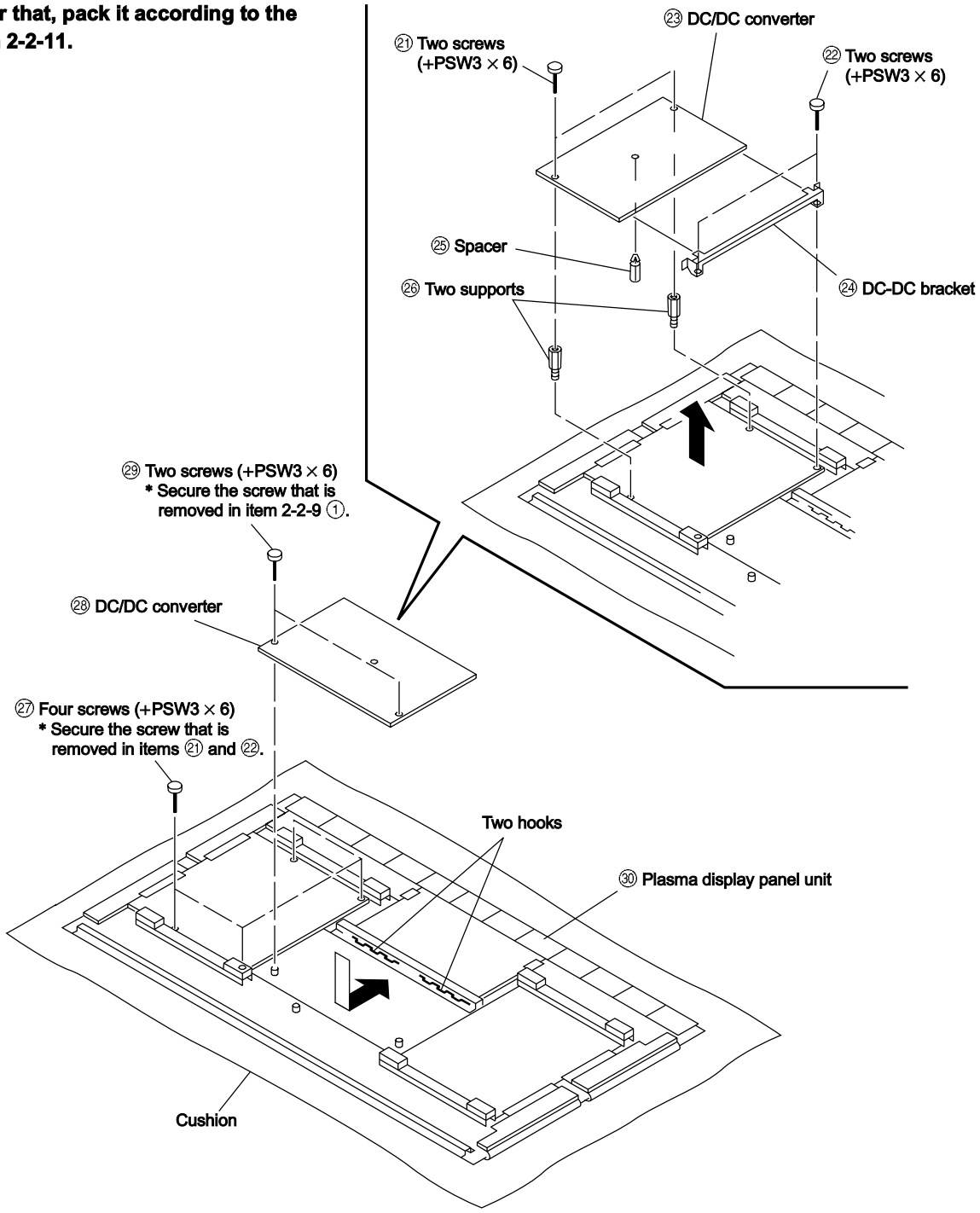

2-2-11. Plasma Display Panel Unit Packing When Sending it to FUJITSU

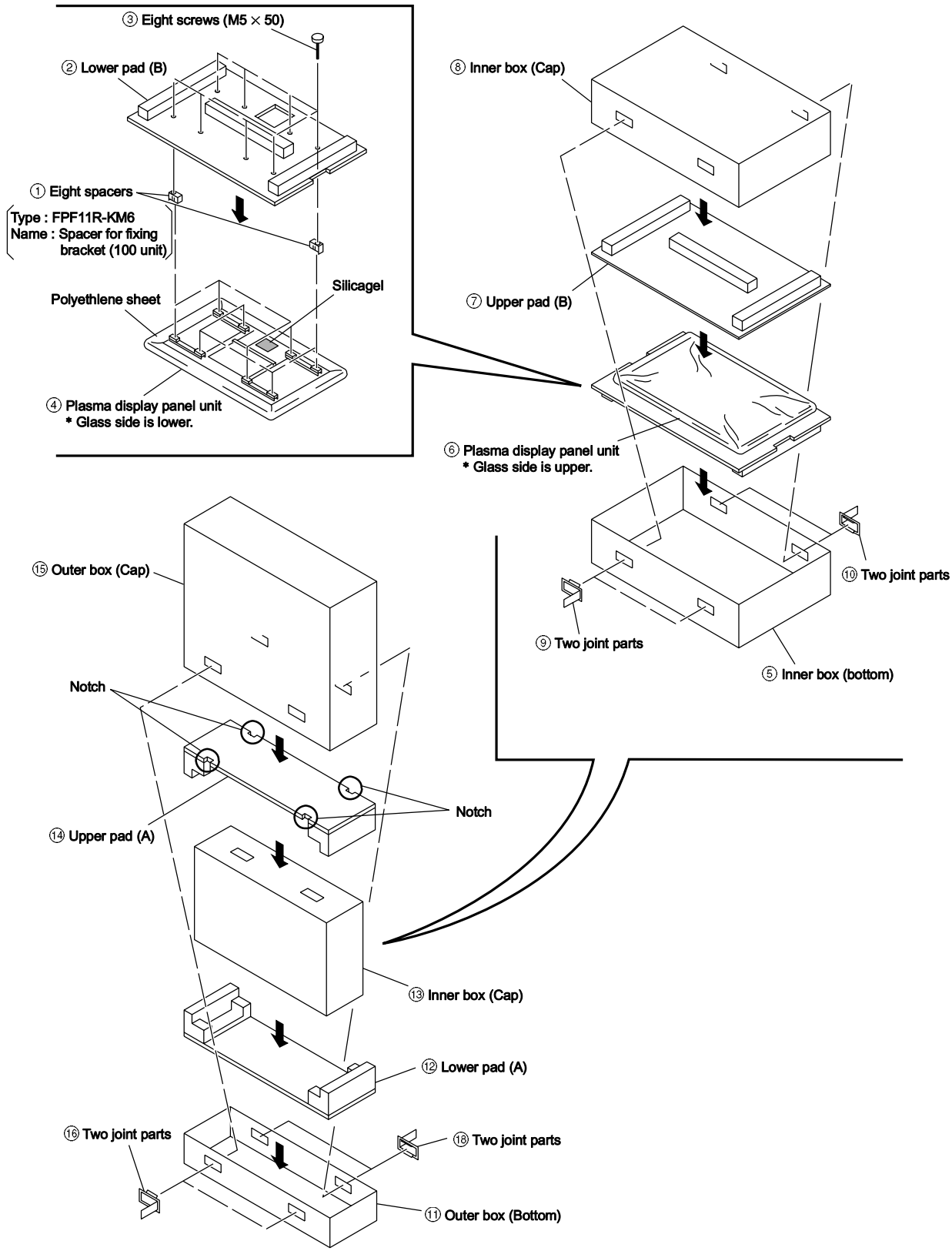

Section 3
Electrical Adjustments

3-1. Equipment Required

- Oscilloscope
  Tektronix 2465 or equivalent
  (band width : 350 MHz or more)
- VG (Programmable video signal generator)
  VG814 or equivalent
- Frequency counter
  Advantest TR5821AK or equivalent
- Digital voltmeter
  Advantest TR6845 or equivalent
- Potential transformer
- Regulated DC power supply
- Remote commander (RM-42B)

Note : Perform the following adjustments at least 5 minutes after turning on the power.

3-2. Electrical Adjustments Using the Service Mode

The electrical adjustments can be performed using the remote commander RM-42B supplied with the PFM-42B1/B1E. The remote commander has the Service Mode. Select the Service Mode to perform the electrical adjustments as listed below.

● Service Menu

When you enter the Service Mode, the mode menu appears as shown below. The mode menu contains the three menus of MAIN MENU, SERVICE MENU and MANUAL MENU as shown. Select the SERVICE MENU to perform the electrical adjustments.

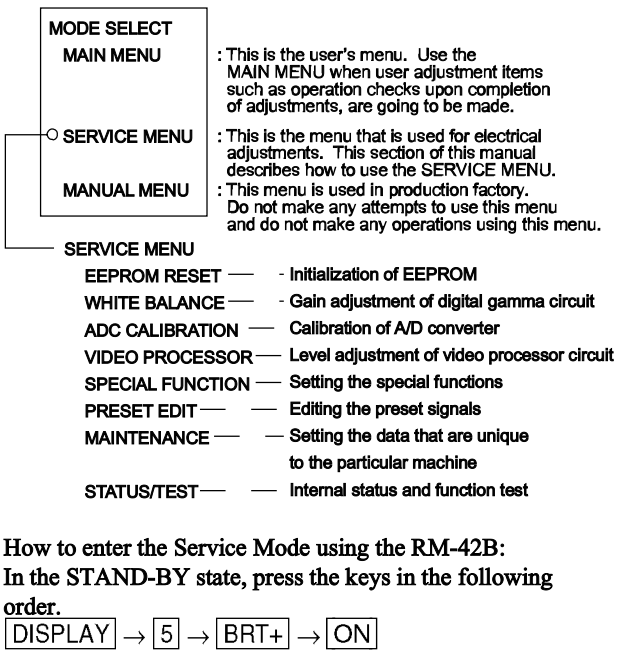

How to enter the Service Mode using the RM-42B:
In the STAND-BY state, press the keys in the following order.
DISPLAY → 5 → BRT+ → ON

How to enter the Service Mode using the commanders other than RM-42B:
In the STAND-BY state, press the keys in the following order.
DISPLAY → 5 → VOL+ → POWER How to exit the Service Mode :
Press the ON key once and back on to enter the STAND-BY state or turn off the main power to exit the Service Mode.

● Operation of remote commander in the Service Mode

The four keys of MENU, ENTER, SELECT+ and SELECT− are the basic operation keys in the same manner as in the user adjustment. The other keys can be operated in the same manner as in the user adjustment.

● The electrical adjustments using the Service Mode become necessary in the following cases.

When any of the following repairs is performed, adjustment using the service mode becomes necessary.

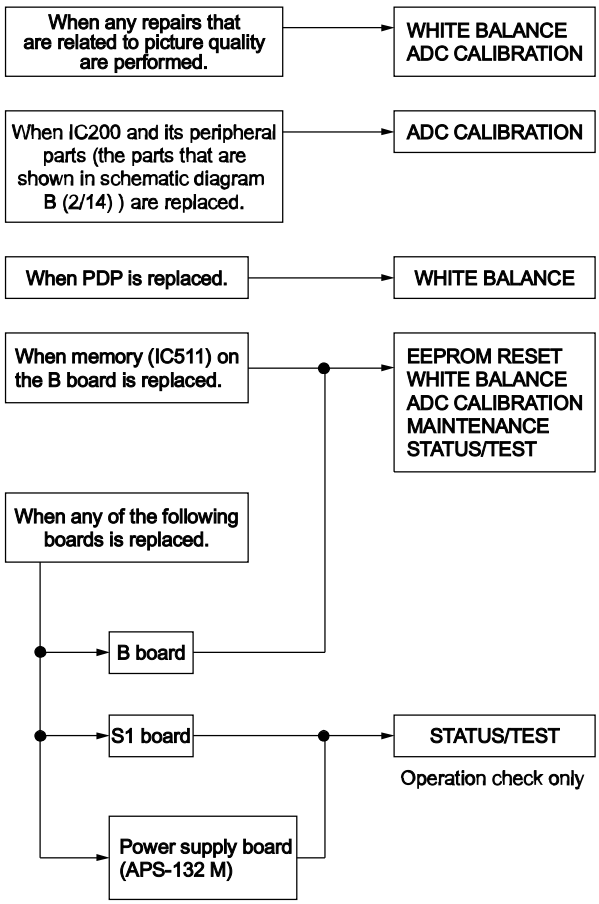

SERVICE MENU

1. EEPROM RESET

EEPROM Configuration

Table 1 shows the configuration of EEPROM. The entire area or the respective areas of the EEPROM can be separately initialized.

Menu Structure

Select the desired area of EEPROM to be initialized using the following menu.

```
EEPROM RESET
▶WHOLE AREA
  COMMON
  COLOR TEMP
  PROG. PRESET
  FIXED PRESET
  LAST MEMORY
  USER MEMORY
  FACTORY
```

To initialize the desired area, firstly select the desired item from the EEPROM RESET menu. Change the selected item from CANCEL to EXECUTE. Then press ENTER.

a) WHOLE AREA
The entire area of the EEPROM is initialized. Initializing the entire area of the EEPROM has the same result as all menu items of COMMON, COLOR TEMP, PROG. PRESET, FIXED PRESET, LAST MEMORY, USER MEMORY and FACTORY are executed.

b) COMMON
Only the COMMON area of the EEPROM as shown in Table 1 is initialized.
When the COMMON area is initialized, the data that is unique to the particular machine and the common data (CONFIG MENU, REMOTE MENU) are initialized.

c) COLOR TEMP
Only the COLOR TEMP area of the EEPROM as shown in Table 1 is initialized.
When the COLOR TEMP area is initialized, the color temperature data in HIGH, LOW and the user setup data from 1 to 6 are initialized to 255. The users names are also initialized to "1" to "6".

d) PROG. PRESET
Only the PROG. PRESET area of the EEPROM as shown in Table 1 is initialized.
When the PROG. PRESET area is initialized, the preset area (for 20 types) that is reserved as spare is initialized.

e) FIXED PRESET
Only the FIXED PRESET area of the EEPROM as shown in Table 1 is initialized.
When the FIXED PRESET area is initialized, the basic preset area is initialized to the built-in standard value that is stored in the system controller.

f) LAST MEMORY
Only the LAST MEMORY area of the EEPROM as shown in Table 1 is initialized.
When the LAST MEMORY area is initialized, only the last memory data of every signal that is adjusted by user is initialized.

g) USER MEMORY
Only the USER MEMORY area of the EEPROM as shown in Table 1 is initialized.
When the USER MEMORY area is initialized, all of the 20 types of adjustment data that is saved by the MEMORY function of the user menu are initialized to EMPTY.

h) FACTORY
Only the FACTORY area of the EEPROM as shown in Table 1 is initialized.
When the FACTORY area is initialized, all areas of the MEMORY except the areas that are listed below are initialized.

Items that are not initialized by the "FACTORY" RESET function.
- EEPROM ID CODE
- INDEX NUMBER
- MODEL NAME
- SERIAL NUMBER
- AUTO PLL SETUP
- AUTO PLL PIXEL
- H/V SHIFT
- VIDEO SHARP SW
- AUTO FT CANCEL
- WATCH ERROR
- Y GAIN
- R-Y GAIN
- B-Y GAIN
- R CUTOFF
- B CUTOFF
- ADC R GAIN
- ADC G GAIN
- ADC B GAIN
- ADC R OFFSET
- ADC G OFFSET
- ADC B OFFSET

2. WHITE BALANCE

Menu Structure

Adjust the white balance of the desired color temperature by selecting the items of the WHITE BALANCE menu and by adjusting the R, G, B gain of the digital gamma circuit.

```
WHITE BALANCE
▶WINDOW      : OFF
  COLOR TEMP : HIGH
  RED GAIN   : 255
  GREEN GAIN : 255
  BLUE GAIN  : 255
```

a) WINDOW
The PFM-42B1/B1E has the built-in window signal for white balance adjustment. There are two sizes that are the large and small windows. Select the optimum size of window for white balance adjustment.
OFF : Window does not appear.
TYPE1 : Small window
TYPE2 : Large widow

Note : When white balance is going to be adjusted using an external signal, perform the A/D converter calibration (referring to the next paragraph 3) ADC CALIBRATION) before starting the white balance adjustment.

b) COLOR TEMP
To adjust the white balance, firstly select the desired color temperature from HIGH, LOW, 1, 2, 3, 4, 5 or 6 on the COLOR TEMP sub-menu. Color temperature of items 1 to 6 are the same as those of the user menu.

c) RED GAIN
Adjust the red gain of the selected color temperature.
The range of adjustment is from 010 to 255.

d) GREEN GAIN
Adjust the green gain of the selected color temperature.
The range of adjustment is from 010 to 255.

e) BLUE GAIN
Adjust the red blue of the selected color temperature.
The range of adjustment is from 010 to 255.

White Balance Adjustment

Refer to section "3-3. White Balance Adjustment".

3. ADC CALIBRATION

Menu Structure

Calibrate the A/D converter (IC200) until non-uniformity between the R, G and B channels of the A/D converter is removed.

```
ADC CALIBRATION
▶AUTO        : OFF
  CAL MODE   : 128
  RED GAIN   : 128
  GREEN GAIN : 128
  BLUE GAIN  : 128
  RED BIAS   : 128
  GREEN BIAS : 128
  BLUE BIAS  : 128

  R:---  G:---  B:---
```

a) AUTO
The A/D converter is automatically calibrated.

Note : When sufficient adjustment accuracy cannot be obtained by the automatic calibration, perform basically the manual calibration using the following ADC CALIBRATION menu items.

b) CAL MODE
The A/D converter has the calibration mode as its operating mode as follows.
* The A/D converter has the R, G, B GAIN adjustments and the R, G, B BIAS adjustments. The GAIN adjustments of the A/D converter are used for CONTRAST adjustment in the machine. The R, G, B BIAS adjustments of the A/D converter are used for BRIGHTNESS adjustment in the machine.

CAL MODE - OFF : Standard display state
The R, G, B GAIN values and the R, G, B BIAS values are controlled by the CONTRAST/BRIGHT data of the user menu. The R, G, B GAIN values and the R, G, B BIAS values of this menu cannot be adjusted independently.
CAL MODE - OFF : Calibration mode
The R, G, B GAIN values and the R, G, B BIAS values of this menu can be adjusted independently. The R, G, B data that appear in the most-bottom part of the menu in cyan, change from the indication "---" to the indication of any digital output data of the A/D converter.

c) RED GAIN/GREEN GAIN/BLUE GAIN
The respective R, G, B GAIN values can be adjusted independently.
The range of adjustment is from 000 to 255.

d) RED BIAS/GREEN BIAS/BLUE BIAS
The respective R, G, B BIAS values can be adjusted independently.
The range of adjustment is from 000 to 255.

A/D Calibration Adjustment

Refer to section "3-4. A/D Calibration Adjustment".

4. VIDEO PROCESSOR

Menu Structure

The following items of the video processor can be adjusted using this menu. However, all items of the video processor have the default values on which normal operations are performed. Therefore, the video processor normally needs no adjustment.

```
VIDEO PROCESSOR
▶Y GAIN          : 111
  R-Y GAIN       : 082
  B-Y GAIN       : 128
  RED CUTOFF     : 143
  BLUE CUTOFF    : 100
  GREEN C/O SW   : ON
```

a) Y GAIN
The range of adjustment is from 000 to 255.
Default value : 111

b) R-Y GAIN
The range of adjustment is from 000 to 255.
Default value : 082

c) B-Y GAIN
The range of adjustment is from 000 to 255.
Default value : 128

d) RED CUTOFF
The range of adjustment is from 000 to 255.
Default value : 143

e) BLUE CUTOFF
The range of adjustment is from 000 to 255.
Default value : 100

f) GREEN C/O SW
This switch is set to ON normally.
However, if white balance cannot be obtained at the CUTOFF position, set this switch to the OFF position and adjust the white balance.

Video Processor Adjustment

Refer to section "3-5. Video Processor Adjustment".
(Perform the service menu adjustment of the video processor only when the specifications cannot be satisfied by section "3-5. Video Processor Adjustment".)

5. SPECIAL FUNCTION

Menu Structure

Various special functions as listed in the SPECIAL FUNCTION menu can be independently set as required.

```
SPECIAL FUNCTION
▶AUTO ASPECT
  AUTO PLL SETUP
  AUTO PLL PIXEL
  H/V SHIFT
  VIDEO SHARP SW
  AUTO FT CANCEL
```

a) AUTO ASPECT (Japanese Model only)
When the BKM-B11 is installed, the aspect ratio is automatically switched by the identification signal at the D terminal.
ON : Aspect ratio is automatically switched by the identification signal
OFF : Automatic switching of aspect ratio is prohibited.

b) AUTO PLL SETUP
Sets enable/disable of automatic execution of the PIXEL ADJUST function.
ON : When the AUTO PLL SETUP is set to ON, the PIXEL ADJUST is automatically executed when the main power is turned on or when the input signal is switched. (Be noted that about 10 seconds are required to output the video signal after switching the input signal when this function is kept to the ON position.)
OFF : The automatic PIXEL ADJUST is executed only when AUTO item of the user menu PIXEL ADJUST is activated.
This function becomes valid only when the signal that enables the PIXEL ADJUST is inputted to the PFM-42B.
Set the AUTO PLL SETUP item to the OFF position normally.

c) AUTO PLL PIXEL

Selects the functions that are automatically adjusted when PIXEL ADJUST is executed.

ON : Both the TOTAL H PIXEL and DOT PHASE are automatically adjusted.

OFF : Only the DOT PHASE is automatically adjusted.

In the case that the PFM-42B1/B1E is used under the environment where input signal contains much noise, there are cases that the PIXEL ADJUST mis-operations. Therefore, set the AUTO PLL PIXEL to the OFF position. In such a case, the TOTAL H PIXEL can be adjusted only manually.

This function becomes valid only when the signal that enables the PIXEL ADJUST is inputted to the PFM-42B.

Set the AUTO PLL PIXEL item to the ON position normally.

d) H/V SHIFT

Selects the method to control the horizontal and vertical picture shift.

EDGE : When EDGE is selected, a picture is shifted by changing the starting position when reading data into memory. Using this function, the entire area including blanking of all pictures can be displayed by shifting. The variable range of shifting is 1 horizontal and vertical period respectively.

CAPT : When CAPT is selected, the picture that is already written into memory is shifted by a scan converter. Using this function, a picture can be shifted as much as ± 50 % of a picture. When a picture is partly lacked at an end of a picture, the lacked portion of a picture cannot be displayed.

Set the H/V SHIFT item to the EDGE position normally.

e) VIDEO SHARP SW

Sets analog aperture ON or OFF.

The two methods are used for the aperture correction of the video signals (NTSC/PAL/SECAM/NTSC4.43/PAL60/PAL-M and YUV signal having horizontal frequency of 15 kHz). These two methods are the scaling filter and the analog aperture of the scan converter.

ON : Both the scaling filter and the analog aperture of the scan converter are used for aperture correction.

OFF : Only the scaling of the scan converter is used for aperture correction.

This function becomes valid only when the signal (NTSC/PAL/SECAM/NTSC4.43/PAL60/PAL-M and YUV signal having horizontal frequency of 15 kHz) is inputted to the PFM-42B.

Set the VIDEO SHARP SW item to the ON position normally.

f) AUTO FT CANCEL

Sets the FT (field tearing) cancel circuit ON or OFF.

The PFM-42B1/B1E has the FT (field tearing) prevention circuit caused by the overrun of memory while it is displaying the moving picture (video and DTV). However, there can be cases that noise appears on screen when the FT (field tearing) prevention is being executed.

ON : The FT (field tearing) is cancelled in every picture size and in every shift conditions as long as the PFM-42B1/B1E is receiving the moving picture. When this item is set to ON, noise may appear only once after the size/shift is adjusted. (Noise does not last long but appears only once when the size/shift adjustment is complete.)

OFF : The FT (field tearing) cancel circuit is disabled. When OFF is selected, there can be a case that the FT (field tearing) appears on screen depending on the adjustment conditions of picture size/shift. However, the noise due to operation of the processing circuit does not occur.

Set the AUTO FT CANCEL item to the ON position normally.

6. PRESET EDIT

Preset Data Configuration

Memory map of the preset data area is shown in Table 1 (PROG. PRESET/FIXED PRESET). The areas from 1 to 20 are assigned to store the additional signal. The areas from 21 to 74 are assigned to store the internal signal.

Menu Structure

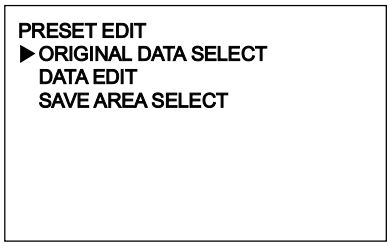

How To Edit The Preset Data

As shown in the illustration, the system controller contains the memory area (i.e., Editing RAM) that is assigned only for data editing. The source data that is used for editing must be firstly copied to the Editing RAM. Edit then the copied data as desired. Finally save the result of editing in the specified preset area of the EEPROM.

(The illustration shows an example that the data in the preset area No. 02 is once copied to the Editing RAM where data is edited. The edited data is sent back to the preset area No. 11 where the edited data is saved.)

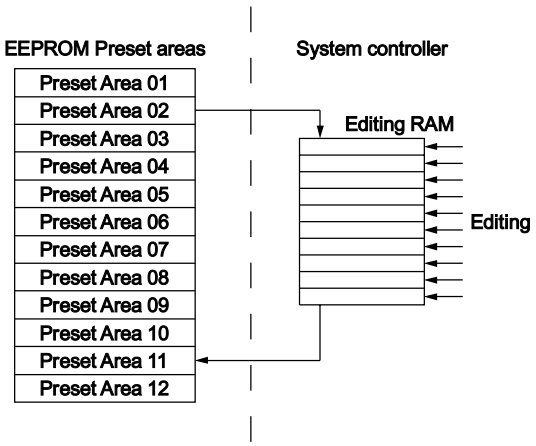

a) ORIGINAL DATA SELECT

Menu Structure

Select the source data that is used for editing. Then the selected source data is copied to the Editing RAM.

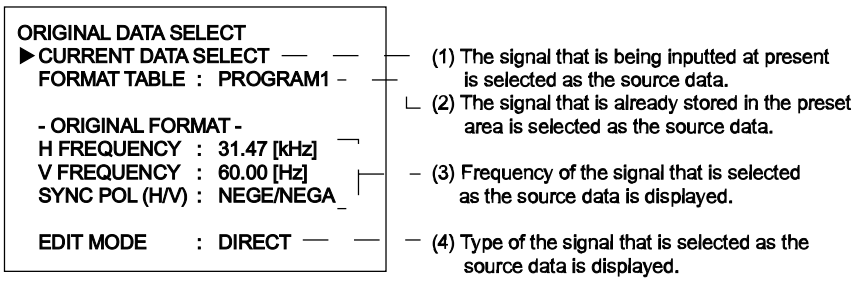

(1) CURRENT DATA SELECT
When an editing is performed using the signal that is being inputted at present is selected as the source data, move the cursor to this item and press ENTER. The selected data is copied to the Editing RAM.

(2) FORMAT TABLE : PROGRAM 1
When an editing is performed using the signal that is already stored in the preset area is selected as the source data, move the cursor to this item and press ENTER. Select the desired area from Table 1 by pressing the +/– keys. The selected data is copied to the Editing RAM.

(3) - ORIGINAL FORMAT -
Frequency of the signal that is selected as the source data in step (1) or (2) is displayed.
Use the frequency data as the fundamental information when selecting a source data.

(4) EDIT MODE
When the signal that is being inputted at present is selected as the source data, the message DIRECT appears. When the signal that is already stored in the preset area is selected as the source data, the message TABLE appears.

Note : The editing items that can be editing here are different in the DIRECT mode and the TABLE mode. Refer to the next sub-section "b) DATA EDIT" for the editing items.

< When DIRECT mode is used for editing >
… The DIRECT mode is used when editing is performed while watching the picture on screen in the case that the specifications of the signal are not known. …
When DIRECT mode is selected, select the desired adjustment item referring to the next sub-section "b) DATA EDIT" by pressing the +/– keys. Press the ENTER key. Then the result of data adjustment is reflected on the display screen. (Pressing the MENU key returns to the previous menu display.)
However, the three adjustment items H FREQUENCY, V FREQUENCY and SYNC POL cannot be changed by the menu operation.

< When TABLE mode is used for editing >
… The TABLE mode is used when the specifications of the signal to edit are already known. …
All adjustment items adjusted by the menu but result of adjustment is not reflected on the actual picture. Data can be edited only.

b) DATA EDIT

Menu Structure

The following items of the source data that is copied to the Editing RAM can be modified as described below.

DATA EDIT			
▶INPUT SELECT	:	01100000	(1) Acceptable type of input signal
INPUT SELECT2	:	00000101	
H FREQUENCY	:	31.47 [kHz]	(2) Horizontal frequency
V FREQUENCY	:	60.00 [Hz]	(3) Vertical frequency
SYNC POL (H/V)	:	NEGA/NEGA	(4) Sync signal polarity
TOTAL H PIXEL	:	800	(5) Total number of horizontal dots
LEFT EDGE	:	140	(6) Horizontal dot position to start reading
H RESOLUTION	:	640	(7) Horizontal resolution (Number of dots)
TOP EDGE	:	35	(8) Vertical dot position to start reading
V RESOLUTION	:	480	(9) Vertical resolution (Number of dots)
DOT PHASE	:	128	(10) Dot phase
CP PLACEMENT	:	005	(11) Clamp pulse width (Number of dots)
CP DURATION	:	016	(12) Clamp pulse position (Number of dots)
INTERLACE MODE	:	OFF	(13) Interlace setting
FILED MODE	:	OFF	(14) In-field processing setting
FRAMELOCK MODE	:	OFF	(15) Vertical sync setting
MATRIX SELECT	:	ITU709	(16) Color difference matrix setting
PICTURE AGC	:	ON	(17) Automatic brightness adjustment setting
ASPECT	:	4 × 3	(18) Aspect ratio setting
ZOOM	:	× 1	(19) Zoom setting
APERTURE INIT	:	MID	(20) Aperture initial value setting
APERTURE HIGH	:	000	(21) Aperture data setting
APERTURE MID	:	002	(22) Aperture data setting
APERTURE LOW	:	004	(23) Aperture data setting
AUTO PLL	:	ON	(24) Automatic PIXEL ADJUST setting
SYNC WIDTH (μs)	:	003.81	(25) Horizontal sync signal width

Note : A maximum of 8 lines of the above menu can be displayed on screen. The other menu items can be displayed by scrolling the display by moving the cursor up or down.

(1) INPUT SELECT

The input signals that are acceptable to the PFM-42B1/ B1E are set.

This item consists of 8 bits. Each bit corresponds to each type of input signal. Only the input channel to which "1" is set, can be received by the PFM-42B.

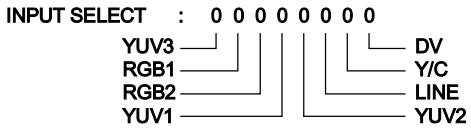

Note : Regarding the LINE and Y/C input channels, these signals having horizontal frequency of 15 kHz can be inputted. Because these input signals pass through the double-speed processing circuit in the PFM-42B circuit configuration, do not use the LINE and Y/C input channels.

(2) INPUT SELECT 2

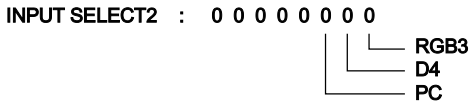

(3) H FREQUENCY

The horizontal frequency is set.

Note: This menu item cannot be modified in the DIRECT mode because the DIRECT mode can edit the signal that is being inputted at present.

(4) V FREQUENCY

The vertical frequency is set.

Note : This menu item cannot be modified in the DIRECT mode because the DIRECT mode can edit the signal that is being inputted at present.

(5) SYNC POL (H/V)

Polarity of sync signal is set.

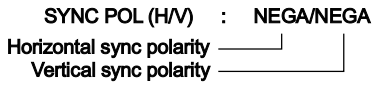

To set the polarity, select as follows:

Negative polarity : NEGA

Positive polarity : POSI

SOG : ---

Note : This menu item cannot be modified in the DIRECT mode because the DIRECT mode can edit the signal that is being inputted at present.

(6) TOTAL H PIXEL

The total number of dots in a horizontal period is set. The number of dots that is set here becomes the initial value of the user menu "TOTAL H PIXEL".

Note : Set the total number of dots to satisfy the following conditions.
TOTAL H PIXEL ≥ [LEFT EDGE + H RESOLUTION]

(7) LEFT EDGE

The horizontal sync width (in dots) + horizontal back porch width (in dots) are set.

(8) H RESOLUTION

Horizontal resolution power is set.

Note : When 1280 or more is set to the horizontal resolution, picture may not be displayed normally on screen. When a signal that has the higher resolution than the SXGA signal, is going to be preset, reduce the number of horizontal resolution by skipping or any other means down to 1280 or less.

(9) TOP EDGE

The vertical sync width (in lines) + vertical back porch width (in lines) are set.

Note : Set the TOP EDGE value to satisfy the following conditions.
[TOP EDGE + V RESOLUTION] ≦ [horizontal frequency + vertical frequency]

(10)V RESOLUTION

The vertical resolution is set.

Note : Set the V RESOLUTION value to satisfy the following conditions.
[TOP EDGE + V RESOLUTION] ≦ [horizontal frequency + vertical frequency]

(11)DOT PHASE

Pulse phase of the horizontal sampling frequency is set.

The pulse phase that is set here becomes the initial value of DOT PHASE of the user menu.

The pulse phase can be set in the range of 000 to 255.

(12)CP PLACEMENT

Clamp pulse position is set.

The clamp pulse position is set starting from the trailing edge of horizontal sync signal (when data is 000). Increasing this value moves the clamp pulse in the direction toward the picture area.

The clamp pulse generating position "Tcp" is given by the following equation starting from the trailing edge of horizontal sync signal.

Tcp = CP PLACEMENT / [horizontal sync frequency × TOTAL H PIXEL] (in seconds)

(13)CP DURATION

Clamp pulse width is set.

The clamp pulse width is set starting from the position that is determined by CP PLACEMENT. Increasing this value widens the clamp pulse width in the direction toward the picture area.

The clamp pulse width "Wcp" is given by the following.

Wcp = CP DURATION / [horizontal sync frequency × TOTAL H PIXEL] (in seconds)

(14)INTERLACE MODE

Whether the input signal is interlaced or not is set.

ON : When the input signal is the interlaced signal.

OFF : When the input signal is not the interlaced signal.

(15)FIELD MODE

Whether the interlaced signal is processed within a field or within a frame, is set.

ON : When the input interlaced signal is processed within a field.

OFF : When the interlaced signal is processed within a frame.

Select the ON position when a signal has a low co-relationship between the two fields within a frame such as moving picture.

(16)FRAMELOCK MODE

Whether the PDP display picture is synchronized with the input signal to scan converter or not, is set.

ON : The PDP display picture is synchronized with the input signal.

OFF : The PDP display picture is asynchronous with the input signal.

When moving picture (animation) is going be displayed, select the ON position.

Note : This item can be set to ON as long as the vertical frequency of the input signal is in the range of 50 to 60 Hz.

(17)MATRIX SELECT

The color difference matrix when the YUV signal is being input, is set.

MATRIX SELECT : ITU601

MATRIX SELECT : ITU709

(18)PICTURE AGC

Whether the PICTURE AGC is turned ON or OFF is set.

Result of this setting becomes the initial value of the user menu PICTURE AGC.

This function becomes valid only when the COMPOSITE/YC/YUV signal is being received.

(19)ASPECT

The desired aspect ratio is selected from the aspect ratios of 4 × 3 or 16 × 9 or W ZOOM or LB ZOOM. Result of this setting becomes the initial value of the user menu ASPECT.

Note : The W ZOOM, can not be selected when the ZOOM is in the range of × 2 to × 4.

(20)ZOOM

The desired zoom ratio is selected from the zoom ratios of × 1 or × 2 or × 3 or × 4. Result of this setting becomes the initial value of the user menu ZOOM.

Note : Any zoom ratios other than × 1 cannot be selected when the ASPECT is W ZOOM, LB ZOOM.

(21)APERTURE INIT

The desired aperture is selected from HIGH or MID or LOW. Result of this setting becomes the initial value of the user menu APERTURE.

(22)APERTURE HIGH

The scaling filter value when selecting HIGH of the APERTURE, is set. The scaling filter value can be set in the range of 000 to 011. (Refer to the Supplement to APERTURE in the following paragraph.)

(23)APERTURE MID

The scaling filter value when selecting MID of the APERTURE, is set. The scaling filter value can be set in the range of 000 to 011. (Refer to the Supplement to APERTURE in the following paragraph.)

(24)APERTURE LOW

The scaling filter value when selecting LOW of the APERTURE, is set. The scaling filter value can be set in the range of 000 to 011. (Refer to the Supplement to APERTURE in the following paragraph.)

< Supplement to APERTURE >

The PFM-42B1/B1E has the 12 different types of built-in scaling filter. Select an appropriate filter using the following filter characteristics chart as a guideline.

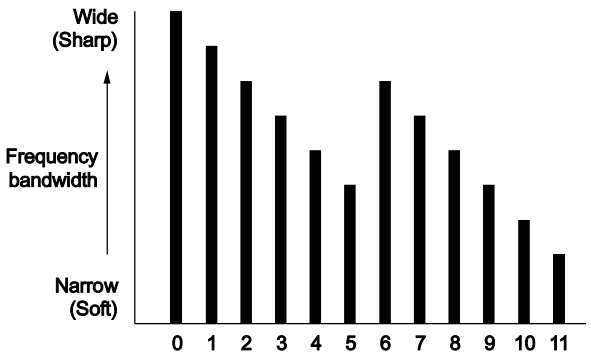

(25)AUTO PLL

Whether the user menu adjustment PIXEL ADJUST is enabled or disabled, is set.

ON : The user menu adjustment PIXEL ADJUST is enabled.

OFF : All items of the adjustment PIXEL ADJUST show the indication [−−−]. The user menu adjustment PIXEL ADJUST is disabled.

Select the OFF position when the setup of the TOTAL H and that of RESOLUTION do not agree with specifications of the actual input signal.

(26)SYNC WIDTH (μs)

Sync pulse width of the horizontal sync signal is set in units of microseconds [μseconds].

This menu item is prepared for the purpose of stabilization of the sync signal separation circuit. Therefore, accurate setting is not necessarily needed.

If the sync signal width is not known, select "Not set" (source data).

c) SAVE AREA SELECT

Menu Structure

The data that is copied in the Editing RAM, is saved in the preset area.

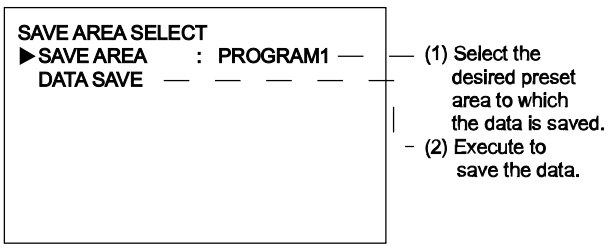

(1) SAVE AREA SELECT

Select the desired preset area from Table 1 to which the content of the Editing RAM is saved.

(2) DATA SAVE

Execute to save the data to the preset area that is selected by the SAVE AREA SELECT. Change the item from CANCEL to EXECUTE. Then press ENTER.

Note : Judgment whether the input signal agrees with the preset data or not, is performed using the horizontal sync frequency, vertical sync frequency and polarity of the sync signals. If the same sync signal already exists in the preset area (Table 1), the specification that has the small preset No., has a higher priority.

7. MAINTENANCE

Menu Structure

The data that is unique to the particular machine of the PFM-42B1/B1E and the scan converter can be upgraded using this menu.

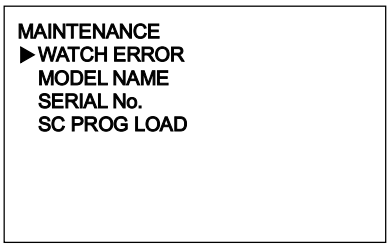

a) WATCH ERROR

Errors of the built-in watch IC can be corrected.

To correct the error, enter the measurement value of the frequency counter that is connected.

Range of adjustment is from 32761.85 Hz to 32774.25 Hz.

b) MODEL NAME

Model name can be set.

c) SERIAL No.

Serial number can be set.

d) SC PROG LOAD

The built-in program of the scan converter can be modified using this menu item.

Change the item from CANCEL to EXECUTE. Then press ENTER.

Watch Error Adjustment

Refer to section "3-6. Watch Error Adjustment".

8. STATUS/TEST

Menu Structure

The internal status of the PFM-42B1/B1E can be checked and its functions can be checked using the STATUS/TEST

```
STATUS/TEST
▶SIGNAL/SYNC
  POWER SUPPLY
  TEMPERATURE
  FAN
  OTHERS
  SOFTWARE VERSION
  TEST FUNCTION
```

menu.

a) SIGNAL/SYNC

```
SIGNAL/SYNC
  H FREQUENCY  :  31.47 [kHz]  —  Horizontal frequency
  V FREQUENCY  :  60.00 [Hz]   —  Vertical frequency
  FORMAT       :  640 × 480/60 —  Specifications of
  SYNC POL (H/V) :  NEGA/NEGA  —  the signal
     STABLE                       Polarity of sync signal
     INSECURE                     Status of sync signal
     NO SYNC
```

Information regarding the sync signal of the input signal is displayed.

Horizontal frequency :
Horizontal frequency of the input signal is displayed in four digits.
Vertical frequency :
Vertical frequency of the input signal is displayed in four digits.
Specifications of the signal :
Names of presets of the preset areas (Table 1) corresponding to input signal are displayed.
Polarity of sync signal :
Polarity of sync signal is displayed.
Status of sync signal :
Status of sync signal is displayed in cyan.

STABLE	: Sync signal is stable.
INSECURE	: Sync signal is unstable.
NO SYNC	: Sync signal does not exist.

b) POWER SUPPLY

```
POWER SUPPLY
  PDP VS (HV)   :  160 [V]  —  PDP drive voltage VS
  PDP VA (MV)   :  060 [V]  —  PDP drive voltage VA
  DIGITAL 5V    :  4.9 [V]  —  5 V power for
                                digital circuitry
```

The main DC power voltages of the PFM-42B are displayed.

PDP drive voltage VS :
High voltage power to PDP is displayed.
PDP drive voltage VA :
Medium voltage power to PDP is displayed.
5 V power for digital circuitry :
Internal 5 V power is displayed.

c) TEMPERATURE

```
TEMPERATURE
  PANEL BACK SIDE
  • I/O BLOCK TOP   :  44 [°C]
  • CENTER          :  55 [°C]
  • DD CON TOP      :  48 [°C]
  • PANEL SIDE      :  32 [°C]
  P/S INTERNAL      :  OK
```

Internal temperature information of PFM-42B1/B1E is displayed.

Temperature at the top on the rear of the panel :
Temperatures upper side of the rear panel are displayed as follows.

I/O BLOCK SIDE	: Temperature at the input/output terminal board.
CENTER	: Center temperature
PANEL SIDE	: Left side of the set
DD CON TOP	: Temperature at the DC-DC converter

Power supply internal temperature information :
Temperature status inside the power supply block is displayed. The message OK appears when temperature is normal. The message NG appears when temperature is abnormal.

d) FAN

```
FAN
  DRIVE CIRCUIT      : OK
  • B BOARD          : OK
  • P/S BLOCK TOP    : OK
  • P/S BLOCK MID    : OK
  • P/S BLOCK LOW L  : OK
  • P/S BLOCK LOW R  : OK
  • DD CON SIDE      : OK
  • I/O BLOCK SIDE   : OK
```

Fan drive circuit:
Indicates the operating status of the fan control circuit.
OK appears when the fan control circuit is operating normally.
NG appears when the fan control circuit is defective.

P/S BLOCK TOP	: Power supply block
P/S BLOCK MID	: Left side of the power supply block
P/S BLOCK LOW L	: Lower left side of the power supply block
P/S BLOCK LOW R	: Lower right side of the power supply block
DD CON SIDE	: Lower left side
I/O BLOCK SIDE	:Lower right side

e) OTHERS

```
OTHERS
  EEPROM ID          : OK
  EEPROM SAVE        : OK
  EEPROM LOAD        : OK
  EEPROM ACK         : OK
  PW164 ACK          : OK
  RTC INITIALIZE     : OK
  RTC BATTERY        : OK
  RTC XTAL           : OK
```

EEP ROM ID	:ID code error
EEP ROM SAVE	:Data write error
EEP ROM LOAD	:Data read error
EEP ROM ACK	:Defective
PW164 ACK	:Communication error with scan converter
RTC INITIALIZE	:Time data initializatioin due to abnormal register value
RTC BATTTERY	:Low backup voltage warning
RTC XTAL	: Warning due to stoppage of crystal oscillator for watch

f) SOFTWARE VERSION

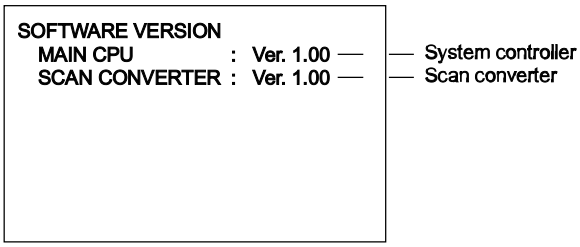

Version of each software is displayed.
System controller :
Version of the main microprocessor is displayed.
Scan converter :
Version of the scan converter (IC207) is displayed.

g) TEST FUNCTION

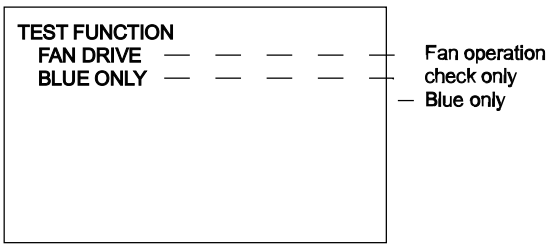

This is the test function.

• Fan operation check only

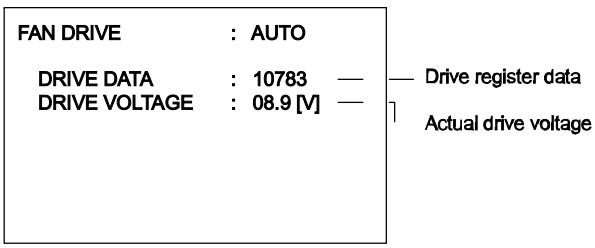

When the FAN DRIVE is changed from AUTO to MANUAL, and ENTER is pressed, the DRIVE DATA indication changes to cyan. In this setup, the drive register value can be manually modified. When the drive register value is changed, the pulse width of the PWM signal in the fan voltage control PWM circuit is changed accordingly.
Fans can be checked whether they operate normally or not by comparing the register value and the actual drive voltage, and by comparing the actual drive voltage and the actual operations of the fans.
Variable range of the drive register value :
00000 to 16383

• Blue only
When Blue only is selected, all of the R, G and B colors become the blue data.

Table 1. EEPROM Configuration

Area	Data Configuration	Standard Value
COMMON	EEPROM ID CODE	Pass code for model ID
	POWER	OFF
	WIDE VGA	OFF
	DISPLAY	ON
	CLOSED CAPTION	OFF
	COLOR SYSTEM	AUTO
	SCREEN FILL	CENTER
	POWER SAVING	OFF
	ON/OFF TIMER	OFF
	POWER ON TIME	0
	POWER OFF TIME	0
	PICTURE INVERSION	OFF
	POWER OFF(INVERT)	NO
	PICTURE ORBITING	OFF
	ORBIT RANGE	5dot
	ORBIT CYCLE	10sec
	LANGUAGE	ENGLISH
	INDEX NUMBER	1
	REMOTE MODE	TV
	REMOTE ONLY	OFF
	MODEL NAME	PFM-42B1
	INPUT CHANNEL	INPUT1 RGB
	OPERATION TIME	000000H
	SERIAL NUMBER	2000001
	INPUT1 SW	RGB
	INPUT2 SW	RGB
	INPUT3 SW	RGB
	VIDEO SW	COMPOSITE
	AUTO ASPECT	ON
	G CUTOFF SW	ON
	AUTO PLL SETUP	OFF
	AUTO PLL PIXEL	ON
	H/V SHIFT	EDGE
	VIDEO SHARP SW	ON
	AUTO FT CANCEL	ON
	WATCH ERROR	32768.05
	Y GAIN	111
	R-Y GAIN	82
	B-Y GAIN	128
	R CUTOFF	112
	B CUTOFF	155
	ADC R GAIN	128
	ADC G GAIN	128
	ADC B GAIN	128

Area	Data Configuration	Standard Value
COMMON	ADC R OFFSET	128
	ADC G OFFSET	128
	ADC B OFFSET	128
COLOR TEMP	RED GAIN (HIGH)	255
	GREEN GAIN (HIGH)	255
	BLUE GAIN (HIGH)	255
	RED GAIN (LOW)	255
	GREEN GAIN (LOW)	255
	BLUE GAIN (LOW)	255
	RED GAIN (USER1)	255
	GREEN GAIN (USER1)	255
	BLUE GAIN (USER1)	255
	RED GAIN (USER2)	255
	GREEN GAIN (USER2)	255
	BLUE GAIN (USER2)	255
	RED GAIN (USER3)	255
	GREEN GAIN (USER3)	255
	BLUE GAIN (USER3)	255
	RED GAIN (USER4)	255
	GREEN GAIN (USER4)	255
	BLUE GAIN (USER4)	255
	RED GAIN (USER5)	255
	GREEN GAIN (USER5)	255
	BLUE GAIN (USER5)	255
	RED GAIN (USER6)	255
	GREEN GAIN (USER6)	255
	BLUE GAIN (USER6)	255
	NAME (HIGH)	HIGH
	NAME (LOW)	LOW
	NAME (USER1)	1
	NAME (USER2)	2
	NAME (USER3)	3
	NAME (USER4)	4
	NAME (USER5)	5
	NAME (USER6)	6

Area	Data Configuration	Standard Value
PROG.	PRESET AREA 1 (PROGRAM 1)	EMPTY
PRESET	PRESET AREA 2 (PROGRAM 2)	EMPTY
	PRESET AREA 3 (PROGRAM 3)	EMPTY
	PRESET AREA 4 (PROGRAM 4)	EMPTY
	PRESET AREA 5 (PROGRAM 5)	EMPTY
	PRESET AREA 6 (PROGRAM 6)	EMPTY
	PRESET AREA 7 (PROGRAM 7)	EMPTY
	PRESET AREA 8 (PROGRAM 8)	EMPTY
	PRESET AREA 9 (PROGRAM 9)	EMPTY
	PRESET AREA10 (PROGRAM10)	EMPTY
	PRESET AREA11 (PROGRAM11)	EMPTY
	PRESET AREA12 (PROGRAM12)	EMPTY
	PRESET AREA13 (PROGRAM13)	EMPTY
	PRESET AREA14 (PROGRAM14)	EMPTY
	PRESET AREA15 (PROGRAM15)	EMPTY
	PRESET AREA16 (PROGRAM16)	EMPTY
	PRESET AREA17 (PROGRAM17)	EMPTY
	PRESET AREA18 (PROGRAM18)	EMPTY
	PRESET AREA19 (PROGRAM19)	EMPTY
	PRESET AREA20 (PROGRAM20)	EMPTY
FIXED	PRESET AREA21	640 × 350@70
PRESET	PRESET AREA22	640 × 350@85
	PRESET AREA23	640 × 400@85
	PRESET AREA24	640 × 480@60
	PRESET AREA25	MAC13
	PRESET AREA26	640 × 480@72
	PRESET AREA27	640 × 480@75
	PRESET AREA28	640 × 480@85
	PRESET AREA29	720 × 400@70
	PRESET AREA30	720 × 400@85
	PRESET AREA31	800 × 600@56
	PRESET AREA32	800 × 600@60
	PRESET AREA33	800 × 600@72
	PRESET AREA34	800 × 600@75
	PRESET AREA35	800 × 600@85
	PRESET AREA36	MAC16
	PRESET AREA37	1024 × 768@43
	PRESET AREA38	1024 × 768@60
	PRESET AREA39	1024 × 768@70
	PRESET AREA40	1024 × 768@75
	PRESET AREA41	1024 × 768@85
	PRESET AREA42	1152 × 864@75
	PRESET AREA43	MAC21
	PRESET AREA44	1280 × 960@60
	PRESET AREA45	1280 × 960@85
	PRESET AREA46	1280 × 1024@60
	PRESET AREA47	1280 × 1024@75
	PRESET AREA48	1280 × 1024@85
	PRESET AREA49	1600 × 1200@60
	PRESET AREA50	575 × 50I
	PRESET AREA51	480 × 60I
	PRESET AREA52	575 × 50P
	PRESET AREA53	480 × 60P
	PRESET AREA54	1080 × 48I
	PRESET AREA55	1080 × 50I
	PRESET AREA56	1080 × 60I
	PRESET AREA57	1035 ×60I
	PRESET AREA58	720 × 50P
	PRESET AREA59	720 × 60P
	PRESET AREA60	852 × 480@60
	PRESET AREA61	856 × 480@60
	PRESET AREA62	856 × 480@60
	PRESET AREA63	856 × 480@60
	PRESET AREA64	1024 × 1024@60
	PRESET AREA65	1280 × 768@56
	PRESET AREA66	Line Doubler 575 × 50I (YUV)
	PRESET AREA67	Line Doubler 480 × 60I (YUV)
	PRESET AREA68	Line Doubler NTSC (LINE)
	PRESET AREA69	Line Doubler PAL (LINE)
	PRESET AREA70	Line Doubler SECAM (LINE)
	PRESET AREA71	Line Doubler 443NT (LINE)
	PRESET AREA72	Line Doubler PAL60 (LINE)
	PRESET AREA73	Line Doubler PAL-M (LINE)
	PRESET AREA74	Line Doubler NTSC (Y/C)
	PRESET AREA75	Line Doubler PAL (Y/C)
	PRESET AREA76	Line Doubler SECAM (Y/C)
	PRESET AREA77	Line Doubler 443NT (Y/C)
	PRESET AREA78	Line Doubler PAL60 (Y/C)
	PRESET AREA79	Line Doubler PAL-M (Y/C)

Area	Data Configuration	Standard Value
LAST	PRESET AREA 1 (PROGRAM 1)	EMPTY
MEMORY	PRESET AREA 2 (PROGRAM 2)	EMPTY
	PRESET AREA 3 (PROGRAM 3)	EMPTY
	PRESET AREA 4 (PROGRAM 4)	EMPTY
	PRESET AREA 5 (PROGRAM 5)	EMPTY
	PRESET AREA 6 (PROGRAM 6)	EMPTY
	PRESET AREA 7 (PROGRAM 7)	EMPTY
	PRESET AREA 8 (PROGRAM 8)	EMPTY
	PRESET AREA 9 (PROGRAM 9)	EMPTY
	PRESET AREA10 (PROGRAM10)	EMPTY
	PRESET AREA11 (PROGRAM11)	EMPTY
	PRESET AREA12 (PROGRAM12)	EMPTY
	PRESET AREA13 (PROGRAM13)	EMPTY
	PRESET AREA14 (PROGRAM14)	EMPTY
	PRESET AREA15 (PROGRAM15)	EMPTY
	PRESET AREA16 (PROGRAM16)	EMPTY
	PRESET AREA17 (PROGRAM17)	EMPTY
	PRESET AREA18 (PROGRAM18)	EMPTY
	PRESET AREA19 (PROGRAM19)	EMPTY
	PRESET AREA20 (PROGRAM20)	EMPTY
	PRESET AREA21	EMPTY
	PRESET AREA22	EMPTY
	PRESET AREA23	EMPTY
	PRESET AREA24	EMPTY
	PRESET AREA25	EMPTY
	PRESET AREA26	EMPTY
	PRESET AREA27	EMPTY
	PRESET AREA28	EMPTY
	PRESET AREA29	EMPTY
	PRESET AREA30	EMPTY
	PRESET AREA31	EMPTY
	PRESET AREA32	EMPTY
	PRESET AREA33	EMPTY
	PRESET AREA34	EMPTY
	PRESET AREA35	EMPTY
	PRESET AREA36	EMPTY
	PRESET AREA37	EMPTY
	PRESET AREA38	EMPTY
	PRESET AREA39	EMPTY
	PRESET AREA40	EMPTY
	PRESET AREA41	EMPTY
	PRESET AREA42	EMPTY
	PRESET AREA43	EMPTY
	PRESET AREA44	EMPTY
	PRESET AREA45	EMPTY
	PRESET AREA46	EMPTY
	PRESET AREA47	EMPTY
	PRESET AREA48	EMPTY
	PRESET AREA49	EMPTY
	PRESET AREA50	EMPTY
	PRESET AREA51	EMPTY
	PRESET AREA52	EMPTY
	PRESET AREA53	EMPTY
	PRESET AREA54	EMPTY
	PRESET AREA55	EMPTY
	PRESET AREA56	EMPTY
	PRESET AREA57	EMPTY
	PRESET AREA58	EMPTY
	PRESET AREA59	EMPTY
	PRESET AREA60	EMPTY
	PRESET AREA61	EMPTY
	PRESET AREA62	EMPTY
	PRESET AREA63	EMPTY
	PRESET AREA64	EMPTY
	PRESET AREA65	EMPTY
	PRESET AREA66	EMPTY
	PRESET AREA67	EMPTY
	PRESET AREA68	EMPTY
	PRESET AREA69	EMPTY
	PRESET AREA70	EMPTY
	PRESET AREA71	EMPTY
	PRESET AREA72	EMPTY
	PRESET AREA73	EMPTY
	PRESET AREA74	EMPTY

Area	Data Configuration	Standard Value
USER	MEMORY No.1	EMPTY
MEMORY	MEMORY No.2	EMPTY
	MEMORY No.3	EMPTY
	MEMORY No.4	EMPTY
	MEMORY No.5	EMPTY
	MEMORY No.6	EMPTY
	MEMORY No.7	EMPTY
	MEMORY No.8	EMPTY
	MEMORY No.9	EMPTY
	MEMORY No.10	EMPTY
	MEMORY No.11	EMPTY
	MEMORY No.12	EMPTY
	MEMORY No.13	EMPTY
	MEMORY No.14	EMPTY
	MEMORY No.15	EMPTY
	MEMORY No.16	EMPTY
	MEMORY No.17	EMPTY
	MEMORY No.18	EMPTY
	MEMORY No.19	EMPTY
	MEMORY No.20	EMPTY
	NAME (No.1)	• • • • • • • • • •
	NAME (No.2)	• • • • • • • • • •
	NAME (No.3)	• • • • • • • • • •
	NAME (No.4)	• • • • • • • • • •
	NAME (No.5)	• • • • • • • • • •
	NAME (No.6)	• • • • • • • • • •
	NAME (No.7)	• • • • • • • • • •
	NAME (No.8)	• • • • • • • • • •
	NAME (No.9)	• • • • • • • • • •
	NAME (No.10)	• • • • • • • • • •
	NAME (No.11)	• • • • • • • • • •
	NAME (No.12)	• • • • • • • • • •
	NAME (No.13)	• • • • • • • • • •
	NAME (No.14)	• • • • • • • • • •
	NAME (No.15)	• • • • • • • • • •
	NAME (No.16)	• • • • • • • • • •
	NAME (No.17)	• • • • • • • • • •
	NAME (No.18)	• • • • • • • • • •
	NAME (No.19)	• • • • • • • • • •
	NAME (No.20)	• • • • • • • • • •

Table 2. Factory Preset Data

AREA	21	22	23	24	25	26	27	28
NAME	VGA-1	VESA640×350	VESA640×400	VGA	Mac13"	VESA640×480@72	VESA640×480@75	VESA640×480@85
ASPECT	4 × 3	4 × 3	4 × 3	4 × 3	4 × 3	4 × 3	4 × 3	4 × 3
SHARPNES	MID	MID	MID	MID	MID	MID	MID	MID
TOTAL H PIXEL	800	832	832	800	864	832	840	832

AREA	29	30	31	32	33	34	35	36
NAME	VGA (TEXT)	VESA720×400@85	VESA800×600@56	VESA800×600@60	VESA800×600@72	VESA800×600@75	VESA800×600@85	Mac16"
ASPECT	4 × 3	4 × 3	4 × 3	4 × 3	4 × 3	4 × 3	4 × 3	4 × 3
SHARPNES	MID	MID	MID	MID	MID	MID	MID	MID
TOTAL H PIXEL	900	936	1024	1056	1040	1056	1048	1152

AREA	38	39	40	41	42	43	44	45
NAME	VESA1024×768@60	VESA1024×768@70	VESA1024×768@75	VESA1024×768@85	VESA1152×864@75	Mac21"	VESA1280×960@60	VESA1280×960@85
ASPECT	4 × 3	4 × 3	4 × 3	4 × 3	4 × 3	4 × 3	4 × 3	4 × 3
SHARPNES	MID	MID	MID	MID	MID	MID	MID	MID
TOTAL H PIXEL	1344	1328	1312	1376	1600	1456	1800	1728

AREA	46	47	48	49	50	51	52	53
NAME	VESA1280×1024@60	VESA1280×1024@75	VESA1280×1024@85	VESA1600×1200@60	575/50I	480/60I	575/50P	480/60P
ASPECT	4 × 3	4 × 3	4 × 3	4 × 3	4 × 3	4 × 3	4 × 3	4 × 3
SHARPNES	MID	MID	MID	MID	LOW	LOW	MID	MID
TOTAL H PIXEL	1688	1688	1728	2160	–	–	1266	800

AREA	54	55	56	59	60	61	62	63
NAME	1080/48I	1080/50I	1080/60I	720/60P	852×480@60	856×480@60 STD	856×480@60 F60	856×480@60 WPS
ASPECT	16 × 9	16 × 9	16 × 9	16 × 9	16 × 9	16 × 9	16 × 9	16 × 9
SHARPNES	MID	MID	MID	MID	MID	MID	MID	MID
TOTAL H PIXEL	1462	1410	1190	1650	1072	1112	1048	1048

Table 3. Preset Timing

AREA	21		22		23		24		25		26		27		28	
NAME	VGA-1		VESA640×350		VESA640×400		VGA		Mac13"		VESA640×480@72		VESA640×480@75		VESA640×480@85	
RESOLUTION	640 × 350		640 × 350		640 × 400		640 × 480		640 × 480		640 × 480		640 × 480		640 × 480	
CLOCK	25.175	MHz	31.5	MHz	31.5	MHz	25.175	MHz	30.24	MHz	31.5	MHz	31.5	MHz	36	MHz
HORIZONTAL																
H.FREQ	31.469	kHz	37.861	kHz	37.861	kHz	31.469	kHz	35	kHz	37.861	kHz	37.5	kHz	43.269	kHz
	µsec	dots	µsec	dots	µsec	dots	µsec	dots	µsec	dots	µsec	dots	µsec	dots	µsec	dots
H.TOTAL	31.77	800	26.413	832	26.413	832	31.778	800	28.571	864	26.413	832	26.667	840	23.111	832
H.BLK	6.356	160	6.09	192	6.095	192	6.356	160	7.407	224	6.096	192	6.35	200	5.334	192
H.FP	0.318	8	1.015	32	1.016	32	0.636	16	2.116	64	0.762	24	0.508	16	1.556	56
H.SYNC	3.813	96	2.032	64	2.032	64	3.813	96	2.116	64	1.27	40	2.032	64	1.556	56
H.BP	2.225	56	3.048	96	3.048	96	1.907	48	3.175	96	4.064	16	3.81	120	2.222	80
H.ACTIVE	25.422	640	20.317	640	20.317	640	25.422	640	21.164	640	20.317	640	20.317	640	17.778	640
VERTICAL																
V.FREQ	70.086	Hz	85.08	Hz	85.08	Hz	59.94	Hz	66.67	Hz	72.809	Hz	75	Hz	85.008	Hz
	msec	lines	msec	lines	msec	lines	msec	lines	msec	lines	msec	lines	msec	lines	msec	lines
V.TOTAL	14.265	449	11.754	445	11.754	445	16.683	525	15	525	13.735	520	13.333	500	11.764	509
V.BLK	3.145	99	2.509	95	1.189	45	1.43	45	1.286	45	1.055	40	0.534	20	0.67	29
V.FP	0.984	31	0.845	32	0.026	1	0.318	10	0.086	3	0.237	9	0.027	1	0.023	1
V.SYNC	0.063	2	0.079	3	0.079	3	0.064	2	0.086	3	0.079	3	0.08	3	0.069	3
V.BP	2.097	66	1.585	60	1.083	41	1.049	33	1.114	39	0.739	28	0.427	16	0.578	25
V.ACTIVE	11.119	350	9.243	350	10.565	400	15.253	480	13.714	480	12.678	480	12.8	480	11.093	480
SYNC																
SOG									YES							
EXT(H/V)	(+/−)		(+/−)		(−/+)		(−/−)		(−/−)		(−/−)		(−/−)		(−/−)	
EXT(COMP)																
COMP VIDEO																
VIDEO LEVEL	0.714V		0.714V		0.714V		0.714V		0.714V		0.714V		0.714V		0.714V	
SYNC LEVEL	TTL		TTL		TTL		TTL		TTL		TTL		TTL		TTL	

AREA	29		30		31		32		33		34		35		36	
NAME	VGA(TEXT)		VESA720×400@85		VESA800×600@56		VESA800×600@60		VESA800×600@72		VESA800×600@75		VESA800×600@85		Mac16"	
RESOLUTION	720 × 400		720 × 400		800 × 600		800 × 600		800 × 600		800 × 600		800 × 600		832 × 624	
CLOCK	28.332	MHz	35.5	MHz	36	MHz	40	MHz	50	MHz	49.5	MHz	56.25	MHz	57.285	MHz
HORIZONTAL																
H.FREQ	31.469	kHz	37.927	kHz	35.156	kHz	37.879	kHz	48.077	kHz	46.875	kHz	53.674	kHz	49.727	kHz
	µsec	dots	µsec	dots	µsec	dots	µsec	dots	µsec	dots	µsec	dots	µsec	dots	µsec	dots
H.TOTAL	31.766	900	26.366	936	28.444	1024	26.4	1056	20.8	1040	21.333	1056	18.631	1048	20.11	1152
H.BLK	6.353	180	6.084	216	6.223	224	6.4	256	4.8	240	5.171	256	4.409	248	5.586	320
H.FP	0.635	18	1.014	36	0.667	24	1	40	1.12	56	0.323	16	0.569	32	0.559	32
H.SYNC	3.812	108	2.028	72	2	72	3.2	128	2.4	120	1.616	80	1.138	64	1.117	64
H.BP	1.906	54	3.042	108	3.556	128	2.2	88	1.28	64	3.232	160	2.702	152	3.91	224
H.ACTIVE	25.413	720	20.282	720	22.222	800	20	800	16	800	16.162	800	14.222	800	14.524	832
VERTICAL																
V.FREQ	70.111	Hz	85.039	Hz	56.25	Hz	60.317	Hz	72.188	Hz	75	Hz	85.061	Hz	74.553	Hz
	msec	lines	msec	lines	msec	lines	msec	lines	msec	lines	msec	lines	msec	lines	msec	lines
V.TOTAL	14.263	449	11.759	446	17.778	625	16.579	628	13.853	666	13.333	625	11.756	631	13.413	667
V.BLK	1.557	49	1.212	46	0.711	25	0.739	28	1.373	66	0.533	25	0.578	31	0.865	43
V.FP	0.381	12	0.026	1	0.028	1	0.026	1	0.77	37	0.021	1	0.019	1	0.06	3
V.SYNC	0.064	2	0.079	3	0.057	2	0.106	4	0.125	6	0.064	3	0.056	3	0.06	3
V.BP	1.112	35	1.107	42	0.626	22	0.607	23	0.478	23	0.448	21	0.503	27	0.744	37
V.ACTIVE	12.706	400	10.546	400	17.067	600	15.84	600	12.48	600	12.8	600	11.179	600	12.549	624
SYNC																
SOG																
EXT(H/V)	(–/+)		(–/+)		(+/+)		(+/+)		(+/+)		(+/+)		(+/+)		(–/–)	
EXT(COMP)																
COMP VIDEO																
VIDEO LEVEL	0.714V		0.714V		0.714V		0.714V		0.714V		0.714V		0.714V		0.714V	
SYNC LEVEL	TTL		TTL		TTL		TTL		TTL		TTL		TTL		TTL	

AREA	38		39		40		41		42		43		44		45	
NAME	VESA1024×768@60		VESA1024×768@70		VESA1024×768@75		VESA1024×768@85		VESA1152×864@75		Mac21"		VESA1280×960@60		VESA1280×960@85	
RESOLUTION	1024 × 768		1024 × 768		1024 × 768		1024 × 768		1152 × 864		1152 × 870		1280 × 960		1280 × 960	
CLOCK	65	MHz	75	MHz	78.75	MHz	94.5	MHz	108	MHz	100	MHz	108	MHz	148.5	MHz
HORIZONTAL																
H.FREQ	48.363	kHz	56.476	kHz	60.023	kHz	68.677	kHz	67.5	kHz	68.681	kHz	60	kHz	85.938	kHz
	μsec	dots	μsec	dots	μsec	dots	μsec	dots	μsec	dots	μsec	dots	μsec	dots	μsec	dots
H.TOTAL	20.677	1344	17.707	1328	16.66	1312	14.561	1376	14.815	1600	14.56	1456	16.667	1800	11.636	1728
H.BLK	4.923	320	4.053	304	3.657	288	3.725	352	4.148	448	3.04	304	4.815	520	3.016	448
H.FP	0.369	24	0.32	24	0.203	16	0.508	48	0.593	64	0.32	32	0.889	96	0.431	64
H.SYNC	2.092	136	1.813	136	1.219	96	1.016	96	1.185	128	1.28	128	1.037	112	1.077	160
H.BP	2.462	160	1.92	144	2.235	176	2.201	208	2.37	256	1.44	144	2.889	312	1.508	224
H.ACTIVE	15.754	1024	13.653	1024	13.003	1024	10.836	1024	10.667	1152	11.52	1152	11.852	1280	8.62	1280
VERTICAL																
V.FREQ	60.004	Hz	70.069	Hz	75.029	Hz	84.997	Hz	75	Hz	75.061	Hz	60	Hz	85.002	Hz
	msec	lines	msec	lines	msec	lines	msec	lines	msec	lines	msec	lines	msec	lines	msec	lines
V.TOTAL	16.666	806	14.272	806	13.328	800	11.765	808	13.333	900	13.323	915	16.667	1000	11.764	1011
V.BLK	0.786	38	0.672	38	0.533	32	0.583	40	0.533	36	0.655	45	0.667	40	0.594	51
V.FP	0.062	3	0.053	3	0.017	1	0.015	1	0.015	1	0.044	3	0.017	1	0.012	1
V.SYNC	0.124	6	0.106	6	0.05	3	0.044	3	0.044	3	0.044	3	0.05	3	0.035	3
V.BP	0.6	29	0.513	29	0.466	28	0.524	36	0.474	32	0.568	39	0.6	36	0.547	47
V.ACTIVE	15.88	768	13.599	768	12.795	768	11.183	768	12.8	864	12.67	870	16	960	11.171	960
SYNC																
SOG																
EXT(H/V)	(–/–)		(–/–)		(+/+)		(+/+)		(+/+)		(–/–)		(+/+)		(+/+)	
EXT(COMP)																
COMP VIDEO																
VIDEO LEVEL	0.714V		0.714V		0.714V		0.714V		0.714V		0.714V		0.714V		0.714V	
SYNC LEVEL	TTL		TTL		TTL		TTL		TTL		TTL		TTL		TTL	

AREA	46		47		48		49		50		51	
NAME	VESA1280×1024@60		VESA1280×1024@75		VESA1280×1024@85		VESA1600×1200@60		PAL		NTSC	
RESOLUTION	1280 × 1024		1280 × 1024		1280 × 1024		1600 × 1200		932 × 573		753 × 483	
CLOCK	108	MHz	135	MHz	157.5	MHz	162	MHz	17.75	MHz	14.318	MHz
HORIZONTAL												
H.FREQ	63.981	kHz	79.976	kHz	91.146	kHz	75	kHz	15.625	kHz	15.734	kHz
	μsec	dots	μsec	dots	μsec	dots	μsec	dots	μsec	dots	μsec	dots
H.TOTAL	15.63	1688	12.504	1688	10.971	1728	13.333	2160	64	1136	63.556	910
H.BLK	3.777	408	3.023	408	2.844	448	3.457	560	12	213	10.9	156
H.FP	0.444	48	0.119	16	0.406	64	0.395	64	1.5	26	1.5	22
H.SYNC	1.037	112	1.067	144	1.016	160	1.185	192	4.7	84	4.7	67
H.BP	2.296	248	1.837	248	1.422	224	1.877	304	5.8	103	4.7	67
H.ACTIVE	11.852	1280	9.481	1280	8.127	1280	9.877	1600	52	923	52.656	754
VERTICAL												
V.FREQ	60.02	Hz	75.025	Hz	85.024	Hz	60	Hz	50	Hz	59.94	Hz
	msec	lines	msec	lines	msec	lines	msec	lines	msec	lines	msec	lines
V.TOTAL	16.661	1066	13.329	1066	11.761	1072	16.667	1250	20	312.5	16.683	262.5
V.BLK	0.657	42	0.526	42	0.527	48	0.666	50	1.632	25.5	1.303	20.5
V.FP	0.016	1	0.013	1	0.011	1	0.013	1	0.192	3	0.254	4
V.SYNC	0.047	3	0.038	3	0.033	3	0.04	3	0.16	2.5	0.191	3
V.BP	0.594	38	0.475	38	0.483	44	0.613	46	1.28	20	0.858	13.5
V.ACTIVE	16.005	1024	12.804	1024	11.235	1024	16	1200	18.368	287	15.381	245
SYNC												
SOG												
EXT(H/V)	(+/+)		(+/+)		(+/+)		(+/+)					
EXT(COMP)												
COMP VIDEO									YES		YES	
VIDEO LEVEL	0.714V		0.714V		0.714V		0.714V		0.700V		0.714V	
SYNC LEVEL	TTL		TTL		TTL		TTL		0.300V		0.286V	

AREA	52		53		54		55		56		59	
TIMING	575/50P		480/60P		1080/48I		1080/50I		1080/60I		720/60P	
DOT CLK	72.00MHz	13.889nsec	54.00MHz	18.519nsec	74.25MHz	13.469nsec	74.25MHz	13.469nsec	74.25MHz	13.469nsec	74.25MHz	13.469nsec
H PERIOD	32.001μsec	2304dots	31.779μsec	1716dots	37.040μsec	2750dots	35.559μsec	2640dots	29.632μsec	2200dots	22.224μsec	1650dots
H DISP	26.001μsec	1872dots	26.668μsec	1440dots	25.861μsec	1920dots	25.861μsec	1920dots	25.861μsec	1920dots	17.241μsec	1280dots
H SYNC	2.362μsec	170dots	2.371μsec	128dots	0.593μsec	44dots	0.593μsec	44dots	0.593μsec	44dots	0.539μsec	40dots
H BACK P	2.889μsec	208dots	2.149μsec	116dots	2.587μsec	192dots	2.587μsec	192dots	2.587μsec	192dots	3.502μsec	260dots
H DS	0.000μsec	0dots	0.000μsec	0dots	0.593μsec	44dots	0.593μsec	44dots	0.593μsec	44dots	0.539μsec	40dots
H DW	2.334μsec	168dots	2.371μsec	128dots	0.593μsec	44dots	0.054μsec	4dots	0.593μsec	44dots	0.539μsec	40dots
H FREQ	31.250kHz	32.000μsec	31.469kHz	31.778μsec	27.000kHz	37.038μsec	28.125kHz	35.556μsec	33.750kHz	29.630μsec	45.000kHz	22.223μsec
SCAN	PROG		PROG		I&V		I&V		I&V		PROG	
V TOTAL	20.000msec	625H	16.684msec	525H	20.834msec	562(562.5)	20.000msec	562(562.5)	16.667msec	562(562.5)	16.667msec	750H
V SYNC	0.089msec	3H	0.178msec	6H	0.186msec	5H	0.178msec	5H	0.149msec	5H	0.149msec	5H
SERRATION	0.015msec	0.5H	0.030msec	1H	0.019msec	0.5H	0.018msec	0.5H	0.015msec	0.5H	0.030msec	1H
EQP ON/OFF	ON		OFF		ON		ON		ON		OFF	
EQP FP	0.089msec	3H	0.000msec	0H	0.019msec	0.5H	0.018msec	0.5H	0.015msec	0.5H	0.000msec	0H
EQP BP	0.060msec	2H	0.000msec	0H	0.019msec	0.5H	0.018msec	0.5H	0.015msec	0.5H	0.000msec	0H
V DISP	17.038msec	575H	14.312msec	483H	20.001msec	540H	19.201msec	540H	16.001msec	540H	21.334msec	720H
V BACK P	1.245msec	42H	0.889msec	30H	0.556msec	15H	0.534msec	15H	0.445msec	15H	0.593msec	20H
V DS	0.000msec	0H	0.000msec	0H	0.038msec	1H	0.036msec	1H	0.030msec	1H	0.030msec	1H
V D LINE	0.089msec	3H	0.089msec	3H	0.186msec	5H	0.178msec	5H	0.149msec	5H	0.149msec	5H
V FREQ	50Hz	20.000msec	60Hz	16.684msec	48Hz	20.834msec	50Hz	20.000msec	60Hz	16.667msec	60Hz	16.667msec
OUTPUT	ANALOG		ANALOG		HDTV1(2)		HDTV1(2)		HDTV1(2)		HDTV1(2)	
ASPECT	4:3		4:3		16:9		16:9		16:9		16:9	

AREA	60		61		62		63	
Resolution	852 × 480		856 × 480 at 60Hz		856 × 480 at 60Hz		856 × 480 at 60Hz	
Pixel Clock	34.0252 [MHz]		33.627 [MHz]		31.500 [MHz]		31.500 [MHz]	
Horizontal Frequency	31.740 [kHz]		30.240 [kHz]		30.057 [kHz]		30.057 [kHz]	
Vertical Frequency	60.000 [Hz]		60.000 [Hz]		59.637 [Hz]		60.115 [Hz]	
Horizontal Sync Polarity	NEGATIVE		NEGATIVE (selectable)		NEGATIVE (selectable)		NEGATIVE (selectable)	
Vertical Sync Polarity	NEGATIVE		NEGATIVE (selectable)		NEGATIVE (selectable)		NEGATIVE (selectable)	
Scan Type	PROGRESSIVE		PROGRESSIVE		PROGRESSIVE		PROGRESSIVE	
Horizontal	Pixels	µsec	Pixels	µsec	Pixels	µsec	Pixels	µsec
Total	1072	31.506	1112	33.069	1048	33.270	1048	33.270
Active	852	25.040	856	25.456	856	27.175	856	27.175
Sync	128	3.762	104	3.093	64	2.032	64	2.032
Front Porch	28	0.823	48	1.427	32	1.016	32	1.016
Back Porch	64	1.881	104	3.093	96	3.048	96	3.048
		31.506		33.069		33.270		33.270
Vertical	Lines	msec	Lines	msec	Lines	msec	Lines	msec
Total	529	16.667	504	16.667	504	16.768	500	16.635
Active	480	15.123	480	15.873	480	15.970	480	15.970
Sync	3	0.095	3	0.099	3	0.100	8	0.266
Front Porch	12	0.378	1	0.033	1	0.033	1	0.033
Back Porch	34	1.071	20	0.661	20	0.665	11	0.366

3-3. White Balance Adjustment

1. Switch the WINDOW to either TYPE1 or TYPE2.
2. Select the COLOR TEMP "HIGH".
3. Select RED GAIN and GREEN GAIN. Perform the white balance adjustment until the color temperature satisfies the specifications of 9300 K.
   Set BLUE GAIN to 255 normally.
4. Select the COLOR TEMP "LOW".
5. Using BLUE GAIN, RED GAIN and GREEN GAIN, perform the white balance adjustment until the color temperature satisfies the specifications of 6500 K.

Note : When the white balance at 6500 K cannot be obtained by any means, decrement the BLUE GAIN by 16 steps and repeat the adjustment of step 5).

6. Switch the WINDOW to OFF.

3-4. A/D Calibration Adjustment

1. Connect the VGA (640 × 480@60) signal to the INPUT1 connector.
2. Connect the cross-hatch signal to the INPUT connector.
   Execute the AUTO item of the PIXEL ADJUST.
3. Select the video signal of the 10 % flat field pattern.
4. Set the CAL mode to ON.
5. Check the following values that are shown in the bottom of the menu in cyan.
   R : XXX / G : XXX / B : XXX
   Adjust RED BIAS and BLUE BIAS until the following two equations are satisfied.
   (G value −1) ≦ R value ≦ (G value +1)
   and
   (G value −1) ≦ B value ≦ (G value +1)
   (Do not adjust GREEN BIAS.)
6. Select the video signal of the maximum brightness 90 % gray scale pattern.
   (Select the gray scale pattern that has the left half of display in black and the right half of display in white.)
7. Check the following values that are shown in the bottom of the menu in cyan.
   R : XXX / G : XXX / B : XXX
   Adjust RED BIAS and BLUE BIAS until the following two equations are satisfied.
   (G value −1) ≦ R value ≦ (G value +1)
   and
   (G value −1) ≦ B value ≦ (G value +1)
   (Do not adjust GREEN BIAS.)
8. Set the CAL mode to OFF.

3-5. Video Processor Adjustment

YUV Level Check and Adjustment

Note: Be sure to use the Z MOUNT (extension board).

1. Connect the YUV 480/60 signal to the INPUT-1 connector.
2. Select the color bar signal.
3. Measure the voltage waveform at pin-14 of IC1003 on the B board with an oscilloscope. Confirm that amplitude of the signal portion excluding the sync signal is in the range of 600 mV ± 5%.
   (If the video signal excluding sync is outside the specifications, adjust the video signal level using the Y GAIN.)
4. Measure the voltage waveform at pin-15 of IC1003 with an oscilloscope. Confirm that the R-Y signal has the following amplitude.
   580 mV ± 5 %
   (If the R-Y signal is outside the specifications, adjust the R-Y signal level using the R-Y GAIN.)
5. Measure the voltage waveform at pin-4 of IC1003 with an oscilloscope. Confirm that the B-Y signal has the following amplitude.
   700 mV ± 5 %
   (If the B-Y signal is outside the specifications, adjust the B-Y signal level using the B-Y GAIN.)

Cutoff Adjustment

1. Connect the Y signal of the 525/60 signal to the Y input only of the YUV input connector.
2. Select the gray scale signal.
3. Observe the dark area of display screen. Adjust R CUTOFF and B CUTOFF until the dark area has completely no color at all.

3-6. Watch Error Adjustment

1. Connect the jig circuit as shown in Fig. (b) and a frequency counter to the B board CN18.
2. Enter the measurement value on a frequency counter in the WATCH ERROR.

WATCH ERROR Jig Circuit

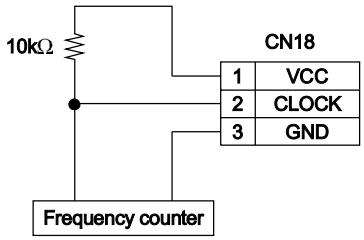

Fig. (b)

3-7. Switching Regulator (APS-132 M Board) Adjustments

3-7-1. Preparation

1. Remove the switching regulator from the set, and adjust it under no load.
2. If adjusting the switching regulator with each output loaded, set as follows.

• **Load on each output**

Output	Pin No.	MIN	MAX
VCC	CN4 ① pin	1.0 A	5.0 A
VS	CN5 ② pin	0.5 A	1.7 A
VA	CN5 ⑤ pin	0.5 A	1.5 A
AUDIO +B	CN6 ③ pin	0.05 A	1.0 A
STBY +5 V	CN7 ② pin	0.2 A	0.3 A
5VD	CN7 ⑤ pin	1.2 A	1.8 A
6.2 V	CN7 ⑧ pin	0.6 A	1.0 A
13.5 V	CN7 ⑫ pin	0.5 A	1.0 A
13 V	CN7 ⑭ pin	0.4 A	1.0 A

3-7-2. 13 V System Minimum Frequency Adjustment

1. Apply 18 V DC to both ends of C169.
2. Connect a frequency counter between gate and source of Q153.

Note : As the input of frequency counter, use 10 : 1 oscilloscope probes and raise the input impedance.

3. Adjust the RV150 so that the oscillation frequency is 93 ± 0.5 kHz.

3-7-3. VS System Minimum Frequency Adjustment

1. Short between pin-3 and pin-4 of PH501.
2. Apply 18 V DC to both ends of C169.
3. Connect a frequency counter between gate and source of Q503.

Note : As the input of frequency counter, use 10 : 1 oscilloscope probes and raise the input impedance.

4. Adjust the RV500 so that the oscillation frequency is 49 ± 0.5 kHz.

3-7-4. VA System Minimum Frequency Adjustment

1. Short between pin-3 and pin-4 of PH701.
2. Apply 18 V DC to both ends of C169.
3. Connect a frequency counter between gate and source of Q703.

Note : As the input of frequency counter, use 10 : 1 oscilloscope probes and raise the input impedance.

4. Adjust the RV700 so that the oscillation frequency is 65 ± 0.5 kHz.

3-7-5. PFC Voltage Adjustment

1. Set the load on each output to the minimum.
2. Apply 100 V AC.
3. Turn the $\overline{\text{STBY}}$ signal ON. (short between CN7 pin-1 and pin-2).
4. Adjust the RV300 so that the voltage across C115 is 385 ± 2 V.

3-7-6. 5 V Adjustment

1. Set the load on each output to the minimum.
2. Apply 100 V AC.
3. Adjust the RV201 so that the voltage of STBY +5 V output (between CN7 pin-2 and pin-6) is 5.12 ± 0.03 V.

3-7-7. 13.5 V Adjustment

1. Set the load on each output to the minimum.
2. Apply 100 V AC.
3. Turn the $\overline{\text{STBY}}$ signal ON. (short between CN7 pin-1 and pin-2).
4. Adjust the RV250 so that the voltage of 13.5 V output (between CN7 pin-12 and pin-11) satisfies 13.7 ± 0.05 V.

3-7-8. VS Adjustment

1. Open the load on VS and VA outputs, and set the load on the other outputs to the minimum.
2. Apply 100 V AC.
3. Turn the $\overline{\text{STBY}}$ signal ON (short between CN7 pin-1 and pin-2), and also the VRR signal ON (short between CN4 pin-7 and CN7 pin-2).
4. Apply 0 V DC to the VRS (CN4 pin-3). Use CN4 pin-4 as GND.
5. Adjust the RV402 so that the voltage of VS output (between CN5 pin-2 and pin-6) is about 149 V.
6. Adjust the RV400 so that the voltage satisfies 149.2 V.
7. Adjust the RV402 so that the voltage satisfies 150 ± 0.1 V.
8. Apply 2 V DC to the VRS.
9. Check that the voltage satisfies 170 ± 0.3 V. If the measured value is out of the range, repeat the above steps from 4, where in step 6, shift the adjustment value a little, then check the voltage.

3-7-9. VS OCP

1. Set the load on each output to the minimum.
2. Apply 100 V AC.
3. Turn the $\overline{\text{STBY}}$ signal ON (short between CN7 pin-1 and pin-2), and also the VRR signal ON (short between CN4 pin-7 and CN7 pin-2).
4. Apply 0 V DC to the VRS (CN4 pin-3). Use CN4 pin-4 as GND.
5. Connect a voltmeter to the VS output (between CN5 pin-2 and pin-6).
6. Set the load on VS output to 3.8 A, and rotate the RV401 until the output voltage varies.

Note : Be careful, not to turn excssively, because power can not be obtained.

3-7-10. VA Adjustment

1. Open the load on VS and VA outputs, and set the load on the other outputs to the minimum.
2. Apply 100 V AC.
3. Turn the $\overline{\text{STBY}}$ signal ON (short between CN7 pin-1 and pin-2), and also the VRR signal ON (short between CN4 pin-7 and CN7 pin-2).
4. Apply 0 V DC to the VRA (CN4 pin-5). Use CN4 pin-6 as GND.
5. Adjust the RV602 so that the voltage of VA output (between CN5 pin-5 and pin-1) is about 49 V.
6. Adjust the RV600 so that the voltage satisfies 49.2 V.
7. Adjust the RV602 so that the voltage satisfies 50 ± 0.1 V.
8. Apply 2 V DC to the VRA.
9. Check that the voltage satisfies 70 ± 0.3 V. If the measured value is out of the range, repeat the above steps from 4, where in step 6, shift the adjustment value a little, then check the voltage.

Note : As the output voltage varies according to the voltage applied to the VRA, do not shift the applied voltage (2 V DC).

3-7-11. VA OCP

1. Set the load on each output to the minimum.
2. Apply 100 V AC.
3. Turn the $\overline{\text{STBY}}$ signal ON (short between CN7 pin-1 and pin-2), and also the VRR signal ON (short between CN4 pin-7 and CN7 pin-2).
4. Apply 0 V DC to the VRA (CN4 pin-5). Use CN4 pin-6 as GND.
5. Connect a voltmeter to the VA output (between CN5 pin-5 and pin-1).
6. Set the load on VA output to 4.4 A, and rotate the RV601 until the output voltage varies.

Note : Be careful, not to turn excssively, because power can not be obtained.

Section 4
Trouble Shooting

4-1. Judging Method When Image Does Not Appear

1. Flow chart

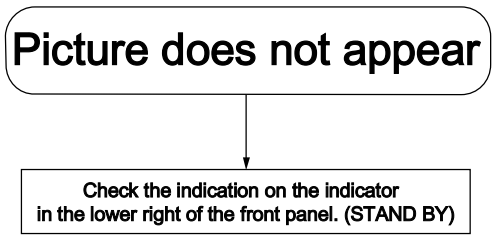

STBY LED flashes

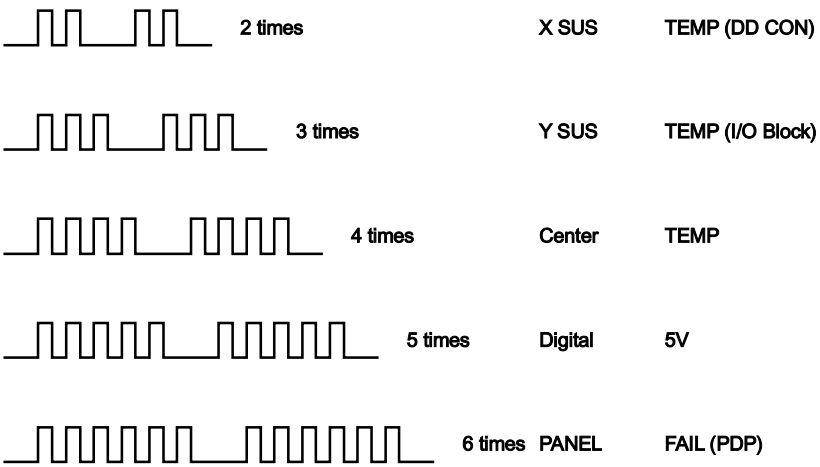

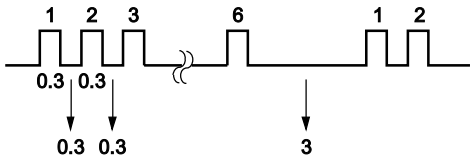

When the STBY LED does not flash, the power supply circuit is defective.

2. How to find PDP unit trouble

1) The power must be supplied normally to the PDP unit. This power is supplied through two black 8-pin connectors from the power unit. The kinds of power supply are 160 V line, 60 V line, and 5 V line.

2) As input signals, H.SYNC (negative polarity), V.SYNC (negative polarity), BLANKING (negative polarity), CLOCK and RGB digital data (8 bit × 3) must be entered normally and DISPEN must be “high”.

   If no images appears through the above conditions are satisfied, the PDP unit will be defective.

4-2. Self Diagnosis Function

4-2-1. Outline

The PFM-42B1/B1E has the self diagnosis function using A/D converter to detect the power supply analog voltages, 8 channels of temperature sensor, fan operations, power unit temperature, DC voltage status, and to check the EEPROM and the watch register. When any abnormality occurs or defect is detected, the standby indicator on the control panel flashes and the detected data is displayed on the service menu [STATUS/TEST] block. If the abnormal status exceeds the allowable limit, the PFM-42B1/B1E is forced to shut down.

The detection items are shown as follows.

1. Increase and decrease of the panel DC voltage Vs is detected.
2. Increase and decrease of the panel DC voltage Va is detected.
3. Increase of temperature at the I/O block on top of the panel is detected. Shut down of machine.
4. Increase of temperature at the center in the top of the panel is detected. Shut down of machine.
5. Increase of temperature at the DC-DC converter on top of the panel is detected. Shut down of machine.
6. Temperature at the left side of the panel is detected.
7. Detection of fan stop and that of drive circuit failure.
   * Two fans at the bottom of the panel and the four fans for power supply circuit. One fan in the I/O block.
8. Detection of temperature rise in the power supply block.
9. Shut down when the 5 V for internal digital circuit has abnormality.
10. Detection of failure of the EEPROM.
11. Detection of abnormality in communication with scan converter.
12. Detection of failure in the ON/OFF control of power supply.
13. Detection of decreased backup power supply voltage for watch and detection of abnormality in oscillator.
14. Detection of PDP failure using the combination of the voltage detection and shut down of the machine.

4-2-2. Criteria for Judgment of Abnormality

1. Increase and decrease of the panel DC voltage Vs is detected.
   (Name of this function on the service menu :
   POWER SUPPLY - PDP VS)

   The normal operating range is + 160 V + 24 V/– 22 V.
   Warning of increase of the voltage Vs when 184 V or more.
   Warning of decrease of the voltage Vs when 138 V or less.

2. Increase and decrease of the panel DC voltage Va is detected.
   (Name of this function on the service menu :
   POWER SUPPLY - PDP VA)
   The normal operating range is + 60 V + 15 V/– 14 V.
   Warning of increase of the voltage Va when 75 V or more.
   Warning of decrease of the voltage Va when 46 V or less.

3. Increase of temperature at the top of the I/O block in the top of the panel is detected and shut down of the machine.
   (Name of this function on the service menu :
   TEMPERATURE - I/O BLOCK TOP)
   The normal operating range is up to 79 °C.
   Warning of high temperature when 80 °C or higher.
   Shut down at the temperature of 85 °C or higher .

4. Increase of temperature at the center in the top of the panel is detected and shut down of the machine.
   (Name of this function on the service menu :
   TEMPERATURE - CENTER)
   The normal operating range is up to 74 °C.
   Warning of high temperature when 75 °C or higher.
   Shut down at the temperature of 80 °C or higher .

5. Increase of temperature at the rear of the PDP and DC-DC converter block is detected.
   (Name of this function on the service menu :
   TEMPERATURE - DD CON TOP)
   The normal operating range is up to 84 °C.
   Warning of high temperature when 85 °C or higher .
   Shut down at the temperature of 90 °C or higher.

6. Detection of at the left side of panel temperature
(Name of this function on the service menu : TEMPERATURE - PANEL SIDE)
Occurrence of abnormality and fault is judged solely from the internal temperature of the PFM-42B1/B1E. Measurement of the ambient temperature aims mainly at the confirmation of the operating environment. Therefore, there is no chance to indicate this warning message.
Warning of high temperature at 85 °C or higher.

7. Detection of fan stop and that of drive circuit failure.
• Detection if fan is stopped or not.
(Name of this function on the service menu : FAN)
Status of the respective fans are displayed as OK or NG on the service menu STATUS.

```
FAN
  DRIVE CIRCUIT      : OK
  • B BOARD          : OK
  • P/S BLOCK TOP    : OK
  • P/S BLOCK MID    : OK
  • P/S BLOCK LOW L  : OK
  • P/S BLOCK LOW R  : OK
  • DD CON SIDE      : OK
  • I/O BLOCK SIDE   : OK
```

• Detection of fan drive circuit failure
(Name of this function on the service menu : FAN - DRIVE CIRCUIT)
The warning when the fan drive data is 6 V or more and the actual drive voltage is 2 V or less : warning

8. Detection of temperature rise in the power supply block.
(Name of this function on the service menu : TEMPERATURE - P/S INTERNAL)
Warning of high temperature when temperature of the heat sink for main converter inside the power supply unit exceeds the allowable limit : warning

WARNING at 90 °C
Shut-down at 95 °C

9. Shut down when the 5 V for internal digital circuit has abnormality.
(Name of this function on the service menu : POWER SUPPLY - DIGITAL 5V)
The voltage that is input to pin-62 of the system controller (IC252) is detected.
Shut down when there is no input voltage :

10. Detection of failure of the EEPROM.
(Name of this function on the service menu : OTHERS)
Warning when communication with EEPROM cannot be performed normally.
• EEPROM ID code error : EEP ROM ID
• EEPROM data write error : EEP ROM SAVE
• EEPROM data read error : EEP ROM LOAD
• EEPROM failure : EEP ROM ACK

11. Detection of abnormality in communication with scan converter.
(Name of this function on the service menu : OTHERS)
Warning when communication with scan converter cannot be performed normally.
PW164ACK

12. Detection of failure in the ON/OFF control of power supply.
(Name of this function on the service menu : Nil)
When the digital 5 V power does not decrease even in the STBY state, the machine enters the POWER ON state automatically.

13. Detection of decreased voltage of the backup power supply for watch and detection of abnormality of oscillator.
(Name of this function on the service menu : OTHERS)
Normal/abnormal is detected from the register value inside the watch IC.
• Initialization of time due to abnormal register value : RTC INITIALIZE
• Warning of low voltage of backup power supply : RTC BATTERY
• Warning that crystal oscillator for watch has stopped : RTC XTAL

14. Detection of PDP failure.
(Name of this function on the service menu : Nil)
PDP is suspected to be defective when DIGITAL 5 V is normal among the voltages (VS, VA, DIGITAL 5 V) required to drive PDP while both VS and VA are not inputted.
When all the following conditions are satisfied, the machine enters once to the STANDBY mode then turn the main power back on again.
1) DC 180 V power is 40 V or less.
2) DC 70 V power is 20 V or less.
3) DIGITAL 5 V is normal.
The above-described operation is repeated three times. If the above three conditions are still satisfied, the PDP is judged to be faulty and the main power is shut down.

Section 5
Semiconductors

24LC21A/SN
BA10358F-E2
BA10358F-T2
BA10393F-E2
CXA1211M-T4
LM1881MX
M24C04-WMN6T
M24C64-WMN6T(A)
MM1113XFBE
NJM2903M-T2
NJU7032M-TE2
ST49C101ACF8-05-TR
TC4W53FU(TE12R)
TC4W66F(TE12R)
TC7W126FU(TE12R)
TL026CPS-E05
μPC358G2-T2

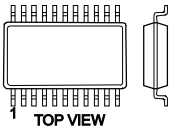

8pin SOP

AD9884AKS-140

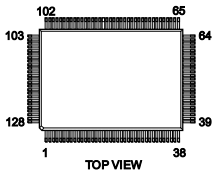

BA033FP-E2
BA09FP-E2
BA12FP-E2

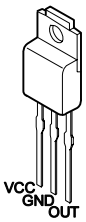

BA7657F-E2

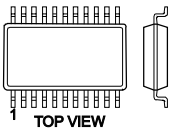

24pin SOP

CXA1739S

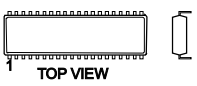

48pin DIP

CXA2119M-T6
MB90096PF-G-182-BND-ER

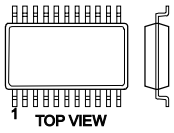

28pin SOP

CXA8038AP
TC74HC4053AP
TK83854D

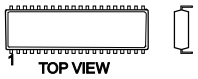

16pin DIP

CXD2030R
EP1K50TC144-3

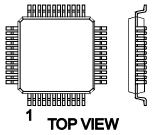

144pin QFP

CXD2090Q

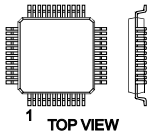

208pin QFP

CXA1860Q-T4
CXD2300Q-T4

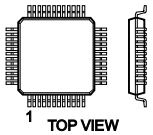

32pin QFP

CXD2309Q-T6

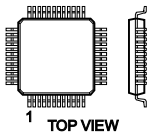

48pin QFP

EPC1LC20-42B1-V100

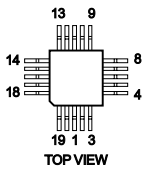

FA5317P

8pin SOP

HD64F2633TE

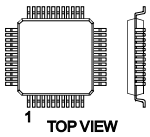

120pin QFP

ICS9161A-01CW16T
MAX202CSE-T
MC74HC4052F
SN74LV4053ANSR
TC74HC123AF(EL)
TC74HC157AF(EL)
TC74HC4052AF(EL)
TC74HC4538AF(EL)

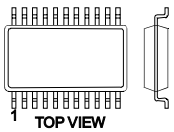

16pin SOP

ISPLSI2023E-110LT48

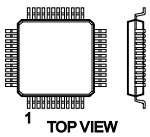

44pin QFP

LM2940SX-5.0

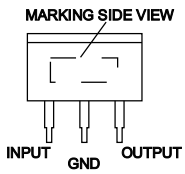

LM317SX

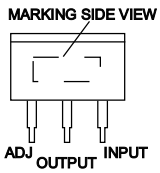

LM35DZ

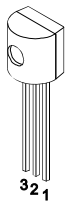

M52347FP-TE
M62352GP-70ED
TC74HCT244AF(EL)
TC74LCX244F(EL)
TC74VHCT245AFT(EL)
TDA8395T/N3

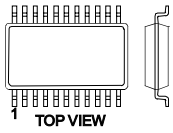

20pin SOP

MBM29LV400TC-70PFTN-SV9695

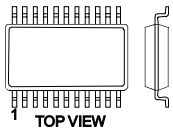

48pin SOP

MSM514265C-60JSDR1

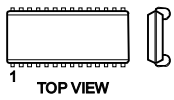

40pin SOJ

MSM56V16160F-10TS-K

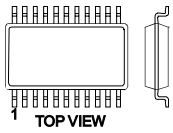

50pin SOP

NJM79L05A

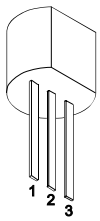

IC, Transistor

PQ07VZ012P

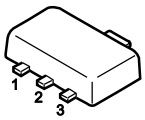

PQ30RV11

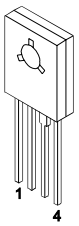

PQ30RV31

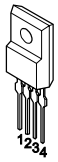

PQ3TZ53U

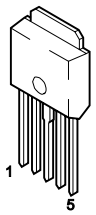

PW164-20WK

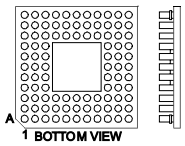

352pin PGA

RPM6940-V4

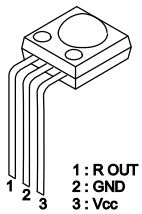

RS5C348A-E2

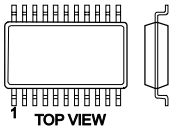

10pin SOP

S-80842ANNP-ED6-T2

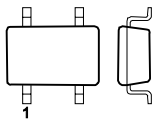

4pin CHIP

SBX8035-H

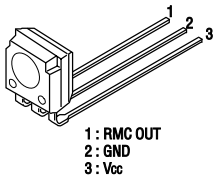

SC7S00F
SC7S04F
TC7S00F(TE85R)
TC7S04F(TE85R)
TC7S04FU(TE85R)
TC7S08FU(TE85R)

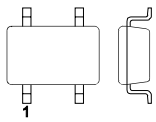

5pin CHIP

SN74LVC125APWR
TC74HC04AF-TP2
TC74HC125AF(EL)
TC74VHC14F(EL)
TC74VHCT04AF(EL)
TLC2932IPWR
TLC2933IPWR-12
TC74HC126AF(EL)

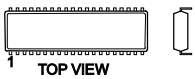

14pin DIP

TA76431AS

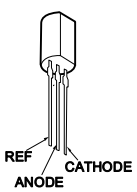

TA78L12S

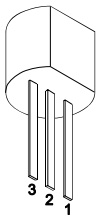

TLC5733AIPM

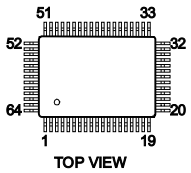

μPC1862GS-E2

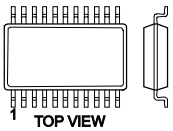

36pin SOP

μPD64082GF-3BA

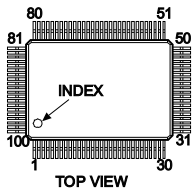

XRA10324AF

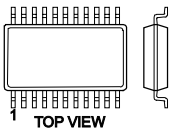

14pin SOP

Z8622812PSC

18pin DIP

2SA1037AK-T146-QR
2SA1162-G
2SB624-BV345
2SB709A-QRS-TX
2SC1623-L5L6
2SC2412K-T-146-QR
DTA114EKA-T146
DTA144EKA-T146
DTC114EKA-T146
DTC144EKA-T146

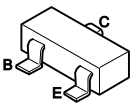

2SA1213Y-TE12L
2SB798-T1-DLDK

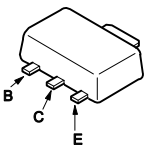

2SB1240TV2QR
2SC2785TP-HFE
2SD1862TV2QR

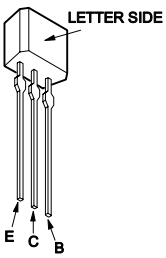

2SJ106-GR

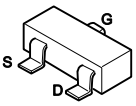

2SJ334
2SK2425
2SK3142-01
2SK3212-01
FS10KM-10
FS7KM-16A

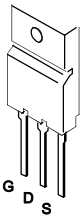

2SJ377(TE16L)

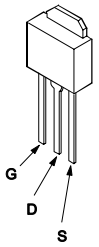

2SK1590-T1B

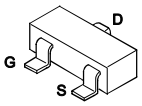

2SK2370(2)

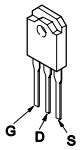

2SK3142-01
2SK3212-01

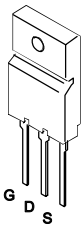

02CZ10-TE85L
02CZ12-TE85L
MA3100-TX

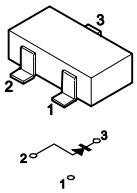

05NH46

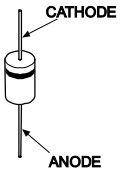

1SS226-TE85L
MA157-TX

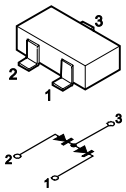

1SS355TE-17
DTZ4.7B
HVU359TRF
MA111-TX
RD12SB2
RD5.6SB
UDZ-TE-17-12B
UDZ-TE-17-3.9B
UDZ-TE-17-4.7B
UDZ-TE-17-5.6B
UDZ-TE-17-7.5B

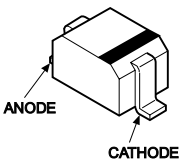

20DL2C41A
20FL2C41A
20JL2C41A

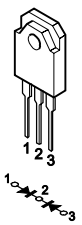

AU02A
D1NL20U
DTZ2.4B-TT11
MTZJ-T-77-10B
RD10ES-B2

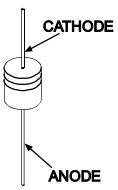

BT139X-600

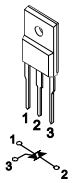

D25XB60

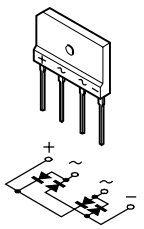

DAN202K-T-146

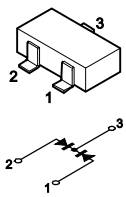

FCH20A10
FCH30A04
FCH30A06

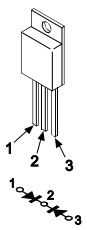

HRU0103ATRF
HZU22B2TRF
HZU30BTRF
HZU6.2BTRF
RD5.6SB2-T1

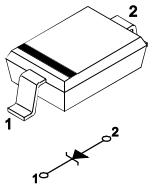

MA8039

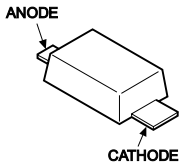

NSQ03A06-TE16L

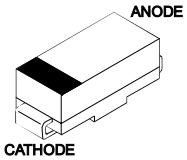

SLR-325MCT31

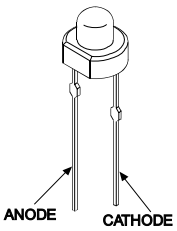

SLR-325VCT31

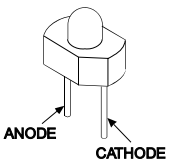

Section 6
Spare Parts

6-1. Notes on Repair Parts

NOTE :

The components identified marked ⚠ are critical for safety.
Replace only with the part number specified.

Les composants identifiés par la marque ⚠ sont critiques pour la sécurité.
Ne les remplacer que par une pièce portant le numéro spécifié.

- Items marked " * " and parts marked with " o " at SP (Supply Code) column of the spare parts list are not stocked since they are seldom required for routine service. Some delay should be anticipated when ordering these items.
- Items with no part number and no description are not stocked because they are seldom required for routine service.
- Due to standardization, replacements in the parts list may be different from the parts specified in the diagrams or the components used on the set.

RESISTORS
- All resistors are in ohms.
- F: nonflammable
- METAL: Metal-film resistor
- METAL OXIDE: Metal oxide-film resistor

6-2. Exploded Views

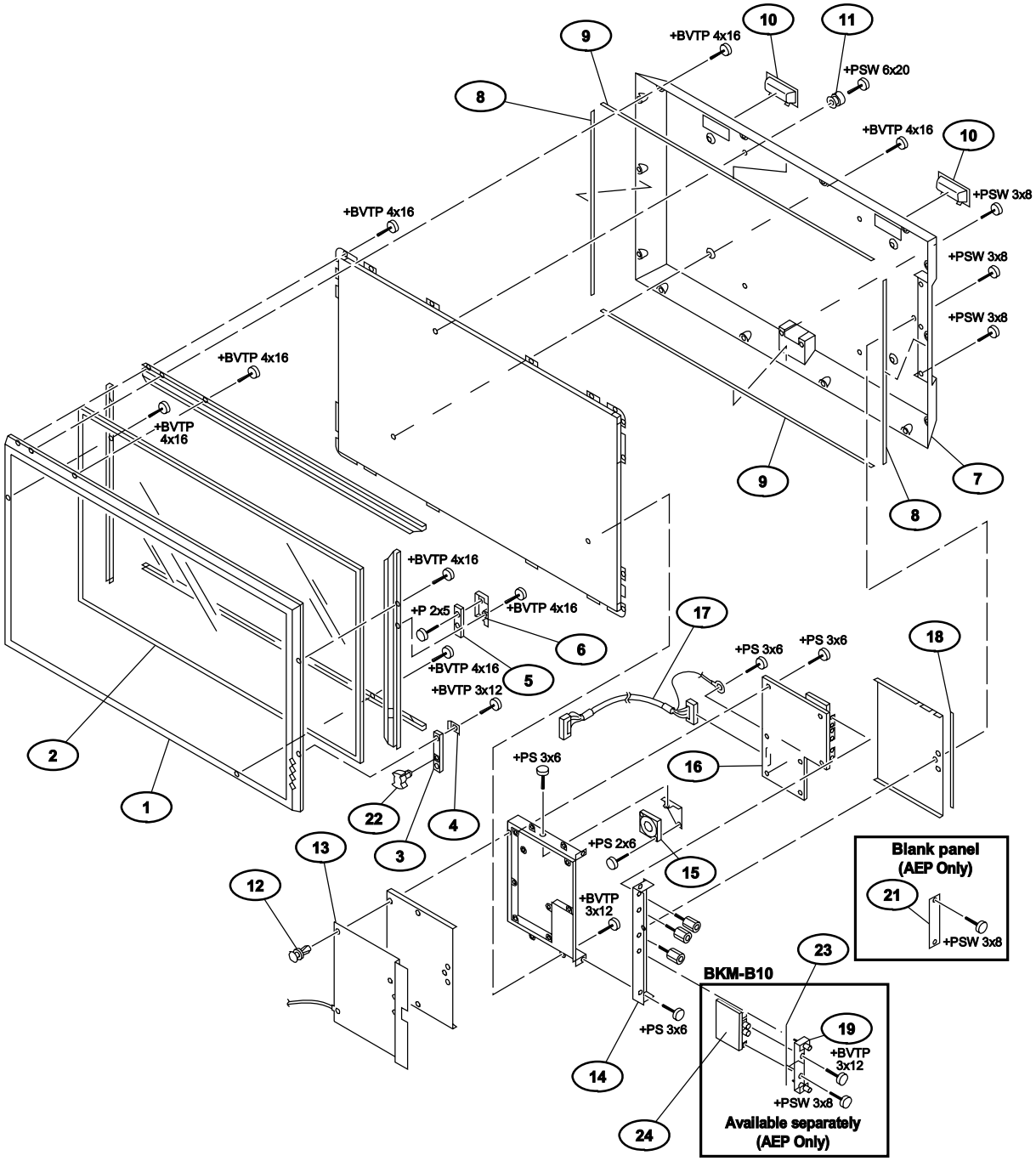

No.	Part No.	SP	Description
1	X-4038-606-1	s	BEZEL ASSY (SILVER)
1	X-4038-606-2	s	BEZEL ASSY (GRAY)
2	1-758-596-11	o	GLASS, OPTICAL FILTER
3	A-1373-841-A	o	MOUNTED CIRCUIT BOARD, YA
4	4-081-423-01	o	PLATE, EARTH
5	A-1373-842-A	o	MOUNTED CIRCUIT BOARD, YB
6	4-080-980-01	o	BRACKET, Y PWB
7	X-4038-607-1	o	COVER ASSY, REAR (SILVER)
7	X-4038-607-2	o	COVER ASSY, REAR (GRAY)
8	4-080-966-01	s	GASKET (1X5)
9	4-080-966-11	s	GASKET (1X5)
10	4-043-825-01	s	HANDLE
11	4-081-315-01	s	KNOB
12	4-049-122-01	s	RIVET
13	4-081-318-01	o	SHEET, SHIELD
14	4-080-989-01	s	PANEL, S/C
15	1-763-670-11	s	DC FAN
16	A-1136-195-A	o	MOUNTED CIRCUIT BOARD, B
17	1-900-257-96	o	CONNECTOR ASSY 80P
18	4-081-317-01	o	GASKET, EMI
19	X-4038-605-1	o	PANEL ASSY, QA
20	X-4038-608-1	o	PANEL ASSY, QB
21	4-080-962-01	o	PANEL, BLANK (AEP ONLY)
22	4-081-302-01	o	SPACER
23	4-081-636-01	o	GASKET, EMI
24	A-1270-443-A	o	MOUNTED CIRCUIT BOARD, QA
Screws/Washers			
	7-628-000-10	s	SCREW +PSW M6X20
	7-628-253-20	s	SCREW +PS 2X6
	7-682-647-09	s	SCREW +PS 3X6
	7-682-948-09	s	SCREW +PSW 3X8
	7-685-103-19	s	SCREW +P 2X5 TYPE2 NON-SLIT
	7-685-648-79	s	SCREW +BVTP 3X12 TYPE2 IT-3
	7-685-663-79	s	SCREW +BVTP 4X16 TYPE2 IT-3

Chassis

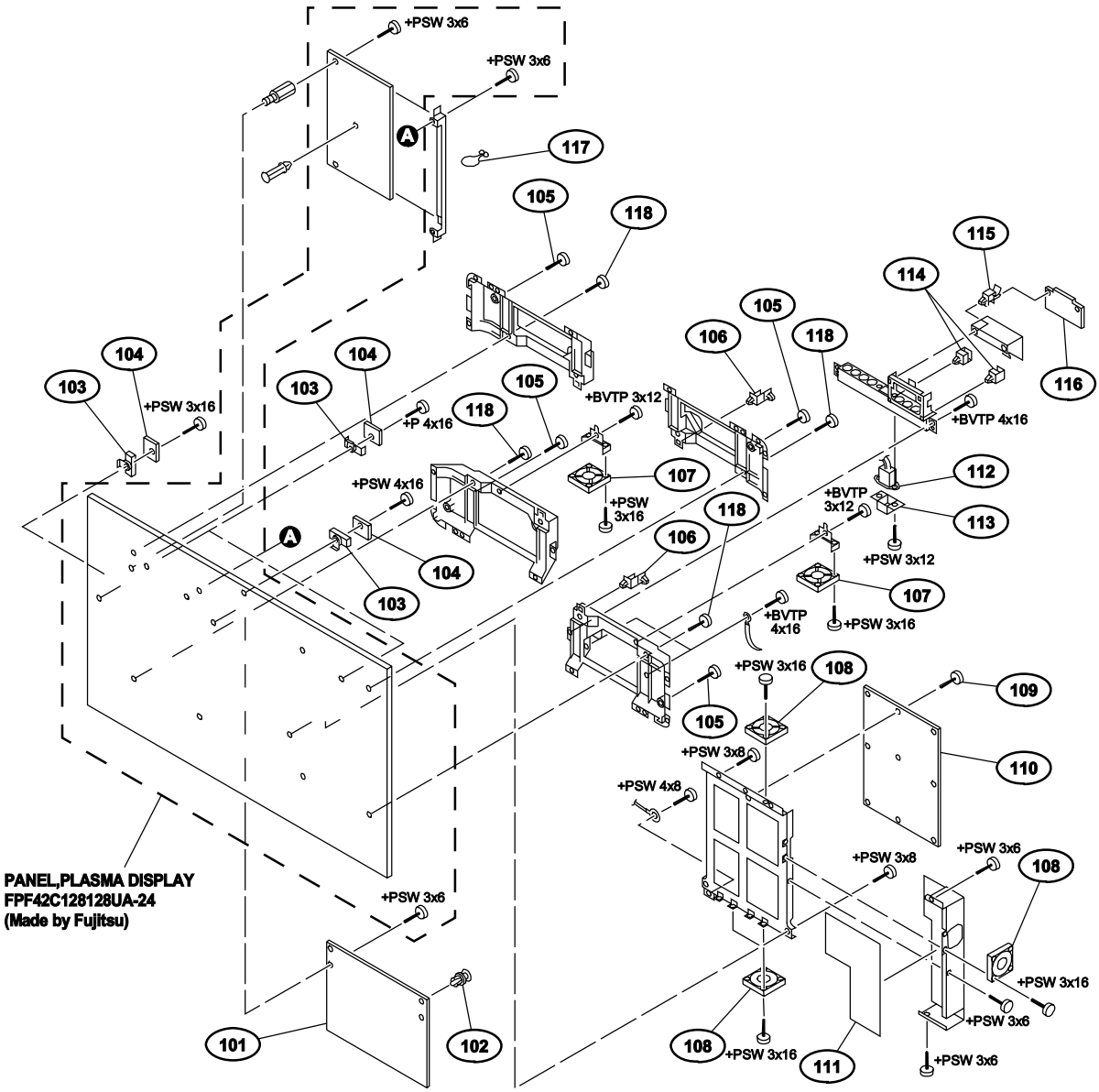
+PSW 3x6
+PSW 3x6
117
105
118
115
114
105
106
118
116
104
103
+PSW 3x16
104
103
+P 4x16
118
105
+BVTP 3x12
+BVTP 4x16
107
112
+PSW 4x16
+PSW 3x16
+BVTP 3x12
113
118
106
+PSW 3x12
104
107
103
+BVTP 4x16
+PSW 3x16
+PSW 3x16
108
109
105
+PSW 3x8
110
+PSW 4x8
+PSW 3x8
+PSW 3x6
108
+PSW 3x16
+PSW 3x6
PANEL,PLASMA DISPLAY
FPF42C128128UA-24
(Made by Fujitsu)
+PSW 3x6
101
102
108
+PSW 3x16
111
+PSW 3x6

No.	Part No.	SP	Description
101	A-1391-081-A	o	MOUNTED CIRCUIT BOARD, T
102	4-049-122-01	s	RIVET
103	4-081-421-01	o	BRACKET, S PWB
104	A-1391-080-A	o	MOUNTED CIRCUIT BOARD, S
105	4-066-309-01	s	SCREW, MACHINE, (+) P M4X8
106	4-353-620-11	o	HINGE, PC BOARD
107	1-763-659-11	s	FAN, DC (WITH SENSOR)
108	1-763-659-11	s	FAN, DC (WITH SENSOR)
109	4-066-309-01	s	SCREW, MACHINE, (+) P M4X8
110	⚠ 1-468-447-11	s	REGULATOR, SWITCHING
111	4-081-424-01	o	SHEET, INSULATING
112	⚠ 1-815-560-11	s	INLET, AC WITH NOISE FILTER
113	2-990-241-02	s	HOLDER (A), PLUG
114	3-659-682-11	o	HOLDER, PC BOARD
115	4-321-929-00	o	HOLDER, PC BOARD
116	1-680-712-11	o	PRINTED WIRING BOARD, F
117	3-701-474-02	s	LOCK, PURSE
118	4-957-517-01	s	SCREW (5X40), +PSW
Screws/Washers			
	7-682-565-04	s	SCREW +P 4X16
	7-682-947-01	s	SCREW +PSW 3X6
	7-682-948-09	s	SCREW +PSW 3X8
	7-682-950-09	s	SCREW +PSW 3X12
	7-682-952-09	s	SCREW +PSW 3X16
	7-682-961-01	s	SCREW +PSW 4X8
	7-682-965-01	s	SCREW +PSW 4X16
	7-685-648-79	s	SCREW +BVTP 3X12 TYPE2 IT-3
	7-685-663-79	s	SCREW +BVTP 4X16 TYPE2 IT-3

Packing Materials

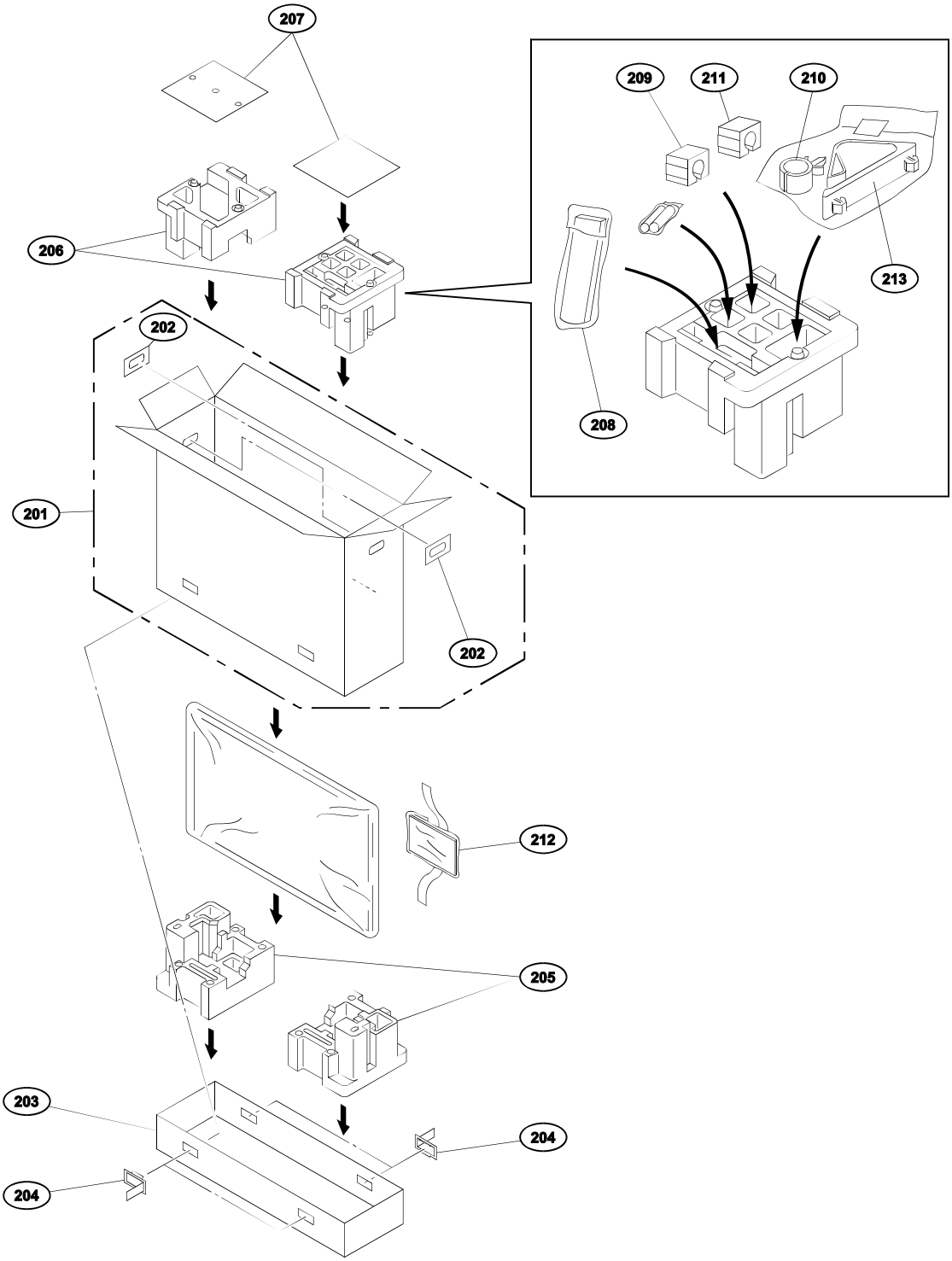

No.	Part No.	SP	Description
201	4-080-651-01	o	INDIVIDUAL CARTON
202	3-704-066-01	o	HANDLE (B)
203	4-080-652-01	o	TRAY
204	3-674-673-01	o	STOPPER (A)
205	4-080-646-01	o	CUSHION (LOWER) (ASSY)
206	4-080-645-01	o	CUSHION (UPPER) (ASSY)
207	4-080-653-01	o	HOLDER
208	1-476-545-11	s	REMOTE COMMANDER (RM-42B)
209	2-990-242-01	s	HOLDER (B), PLUG
210	4-066-900-01	s	CLAMP, MINI
211	3-613-640-01	o	PLUG,HOLDER C
212	4-080-938-01	s	OPERATING, INSTRUCTIONS (JAPANESE, ENGLISH, FRENCH, GERMAN, SPANISH, ITALIAN, SIMPLIFIED CHINESE)
213	4-081-316-01	s	HOLDER, CABLE

6-3. Electrical Parts List

B BOARD

Ref. No. or Q'ty	Part No.	SP	Description
1pc	A-1136-195-A	o	MOUNTED CIRCUIT BOARD, B
1pc	1-251-093-11	s	SOCKET,IC
BAT500	1-550-104-11	s	HOLDER,BATTERY
C1	1-128-416-11	s	CAPACITOR ELECT 100MF/16V(105C
C2	1-128-416-11	s	CAPACITOR ELECT 100MF/16V(105C
C3	1-128-416-11	s	CAPACITOR ELECT 100MF/16V(105C
C4	1-128-416-11	s	CAPACITOR ELECT 100MF/16V(105C
C6	1-164-004-11	s	CAPACITOR,CERAMIC 0.1MF/25V
C7	1-164-004-11	s	CAPACITOR,CERAMIC 0.1MF/25V
C8	1-164-004-11	s	CAPACITOR,CERAMIC 0.1MF/25V
C9	1-164-004-11	s	CAPACITOR,CERAMIC 0.1MF/25V
C10	1-164-004-11	s	CAPACITOR,CERAMIC 0.1MF/25V
C12	1-128-416-11	s	CAPACITOR ELECT 100MF/16V(105C
C13	1-126-396-11	s	CAPACITOR,ELECT 47MF/16V(CHIP)
C14	1-164-004-11	s	CAPACITOR,CERAMIC 0.1MF/25V
C15	1-164-004-11	s	CAPACITOR,CERAMIC 0.1MF/25V
C16	1-164-004-11	s	CAPACITOR,CERAMIC 0.1MF/25V
C18	1-164-004-11	s	CAPACITOR,CERAMIC 0.1MF/25V
C19	1-128-416-11	s	CAPACITOR ELECT 100MF/16V(105C
C20	1-128-416-11	s	CAPACITOR ELECT 100MF/16V(105C
C21	1-128-416-11	s	CAPACITOR ELECT 100MF/16V(105C
C23	1-128-416-11	s	CAPACITOR ELECT 100MF/16V(105C
C24	1-164-004-11	s	CAPACITOR,CERAMIC 0.1MF/25V
C25	1-128-416-11	s	CAPACITOR ELECT 100MF/16V(105C
C26	1-164-004-11	s	CAPACITOR,CERAMIC 0.1MF/25V
C27	1-128-416-11	s	CAPACITOR ELECT 100MF/16V(105C
C100	1-164-004-11	s	CAPACITOR,CERAMIC 0.1MF/25V
C101	1-164-004-11	s	CAPACITOR,CERAMIC 0.1MF/25V
C102	1-163-021-91	s	CAPACITOR, CERAMIC 0.01MF/50V
C103	1-163-021-91	s	CAPACITOR, CERAMIC 0.01MF/50V
C104	1-115-566-11	s	CAPACITOR,CERAMIC 4.7MF B/6.3V
C105	1-115-566-11	s	CAPACITOR,CERAMIC 4.7MF B/6.3V
C106	1-115-566-11	s	CAPACITOR,CERAMIC 4.7MF B/6.3V
C107	1-115-566-11	s	CAPACITOR,CERAMIC 4.7MF B/6.3V
C108	1-117-148-11	s	CAPACITOR,ELECT 4.7MF 50V
C109	1-164-004-11	s	CAPACITOR,CERAMIC 0.1MF/25V
C110	1-126-405-11	s	CAPACITOR,ELECT 10MF/50V(CHIP
C111	1-164-004-11	s	CAPACITOR,CERAMIC 0.1MF/25V
C113	1-126-396-11	s	CAPACITOR,ELECT 47MF/16V(CHIP)
C114	1-164-004-11	s	CAPACITOR,CERAMIC 0.1MF/25V
C115	1-163-251-11	s	CAPACITOR CERAMIC 100PF/50V
C116	1-163-259-91	s	CAPACITOR,CHIP CERAMIC 220PF
C117	1-164-004-11	s	CAPACITOR,CERAMIC 0.1MF/25V
C200	1-125-889-11	s	CAPACITOR, C.CERAMIC 2.2MF
C201	1-163-021-91	s	CAPACITOR, CERAMIC 0.01MF/50V
C202	1-125-889-11	s	CAPACITOR, C.CERAMIC 2.2MF
C203	1-125-889-11	s	CAPACITOR, C.CERAMIC 2.2MF
C204	1-164-004-11	s	CAPACITOR,CERAMIC 0.1MF/25V
C205	1-126-400-11	s	CAPACITOR ELECT 22MF/35V(CHIP)
C206	1-164-004-11	s	CAPACITOR,CERAMIC 0.1MF/25V
C207	1-164-004-11	s	CAPACITOR,CERAMIC 0.1MF/25V
C208	1-163-021-91	s	CAPACITOR, CERAMIC 0.01MF/50V
C209	1-164-004-11	s	CAPACITOR,CERAMIC 0.1MF/25V
C210	1-163-021-91	s	CAPACITOR, CERAMIC 0.01MF/50V
C211	1-164-004-11	s	CAPACITOR,CERAMIC 0.1MF/25V
C212	1-164-004-11	s	CAPACITOR,CERAMIC 0.1MF/25V

(B BOARD)

Ref. No. or Q'ty	Part No.	SP	Description
C213	1-164-004-11	s	CAPACITOR,CERAMIC 0.1MF/25V
C214	1-164-004-11	s	CAPACITOR,CERAMIC 0.1MF/25V
C215	1-164-004-11	s	CAPACITOR,CERAMIC 0.1MF/25V
C216	1-163-021-91	s	CAPACITOR, CERAMIC 0.01MF/50V
C217	1-164-489-11	s	CAPACITOR,CHIP CERAMIC 0.22MF
C218	1-164-004-11	s	CAPACITOR,CERAMIC 0.1MF/25V
C219	1-164-004-11	s	CAPACITOR,CERAMIC 0.1MF/25V
C220	1-164-004-11	s	CAPACITOR,CERAMIC 0.1MF/25V
C221	1-164-004-11	s	CAPACITOR,CERAMIC 0.1MF/25V
C222	1-164-004-11	s	CAPACITOR,CERAMIC 0.1MF/25V
C223	1-164-004-11	s	CAPACITOR,CERAMIC 0.1MF/25V
C224	1-164-004-11	s	CAPACITOR,CERAMIC 0.1MF/25V
C225	1-164-004-11	s	CAPACITOR,CERAMIC 0.1MF/25V
C226	1-164-004-11	s	CAPACITOR,CERAMIC 0.1MF/25V
C227	1-164-004-11	s	CAPACITOR,CERAMIC 0.1MF/25V
C228	1-126-400-11	s	CAPACITOR ELECT 22MF/35V(CHIP)
C229	1-164-004-11	s	CAPACITOR,CERAMIC 0.1MF/25V
C230	1-164-004-11	s	CAPACITOR,CERAMIC 0.1MF/25V
C231	1-164-004-11	s	CAPACITOR,CERAMIC 0.1MF/25V
C232	1-164-004-11	s	CAPACITOR,CERAMIC 0.1MF/25V
C233	1-164-004-11	s	CAPACITOR,CERAMIC 0.1MF/25V
C234	1-164-004-11	s	CAPACITOR,CERAMIC 0.1MF/25V
C235	1-164-004-11	s	CAPACITOR,CERAMIC 0.1MF/25V
C236	1-164-004-11	s	CAPACITOR,CERAMIC 0.1MF/25V
C237	1-164-004-11	s	CAPACITOR,CERAMIC 0.1MF/25V
C238	1-164-004-11	s	CAPACITOR,CERAMIC 0.1MF/25V
C239	1-164-004-11	s	CAPACITOR,CERAMIC 0.1MF/25V
C240	1-164-004-11	s	CAPACITOR,CERAMIC 0.1MF/25V
C241	1-164-004-11	s	CAPACITOR,CERAMIC 0.1MF/25V
C242	1-164-004-11	s	CAPACITOR,CERAMIC 0.1MF/25V
C243	1-164-004-11	s	CAPACITOR,CERAMIC 0.1MF/25V
C244	1-164-004-11	s	CAPACITOR,CERAMIC 0.1MF/25V
C245	1-164-004-11	s	CAPACITOR,CERAMIC 0.1MF/25V
C246	1-164-004-11	s	CAPACITOR,CERAMIC 0.1MF/25V
C247	1-164-004-11	s	CAPACITOR,CERAMIC 0.1MF/25V
C248	1-164-004-11	s	CAPACITOR,CERAMIC 0.1MF/25V
C249	1-164-004-11	s	CAPACITOR,CERAMIC 0.1MF/25V
C250	1-164-004-11	s	CAPACITOR,CERAMIC 0.1MF/25V
C251	1-164-004-11	s	CAPACITOR,CERAMIC 0.1MF/25V
C252	1-164-004-11	s	CAPACITOR,CERAMIC 0.1MF/25V
C253	1-164-004-11	s	CAPACITOR,CERAMIC 0.1MF/25V
C254	1-164-004-11	s	CAPACITOR,CERAMIC 0.1MF/25V
C255	1-164-004-11	s	CAPACITOR,CERAMIC 0.1MF/25V
C256	1-164-004-11	s	CAPACITOR,CERAMIC 0.1MF/25V
C257	1-164-004-11	s	CAPACITOR,CERAMIC 0.1MF/25V
C258	1-164-004-11	s	CAPACITOR,CERAMIC 0.1MF/25V
C259	1-135-216-11	s	CAPACITOR TANTATUM 10MF/10V
C260	1-164-004-11	s	CAPACITOR,CERAMIC 0.1MF/25V
C262	1-164-004-11	s	CAPACITOR,CERAMIC 0.1MF/25V
C264	1-164-004-11	s	CAPACITOR,CERAMIC 0.1MF/25V
C265	1-164-004-11	s	CAPACITOR,CERAMIC 0.1MF/25V
C266	1-164-004-11	s	CAPACITOR,CERAMIC 0.1MF/25V
C267	1-164-004-11	s	CAPACITOR,CERAMIC 0.1MF/25V
C268	1-164-004-11	s	CAPACITOR,CERAMIC 0.1MF/25V
C269	1-164-004-11	s	CAPACITOR,CERAMIC 0.1MF/25V
C270	1-164-004-11	s	CAPACITOR,CERAMIC 0.1MF/25V
C271	1-164-004-11	s	CAPACITOR,CERAMIC 0.1MF/25V
C272	1-164-004-11	s	CAPACITOR,CERAMIC 0.1MF/25V
C273	1-164-004-11	s	CAPACITOR,CERAMIC 0.1MF/25V

(B BOARD)

Ref. No. or Q'ty	Part No.	SP	Description
C274	1-164-004-11	s	CAPACITOR,CERAMIC 0.1MF/25V
C275	1-164-004-11	s	CAPACITOR,CERAMIC 0.1MF/25V
C276	1-164-004-11	s	CAPACITOR,CERAMIC 0.1MF/25V
C277	1-126-396-11	s	CAPACITOR,ELECT 47MF/16V(CHIP)
C279	1-164-004-11	s	CAPACITOR,CERAMIC 0.1MF/25V
C280	1-164-004-11	s	CAPACITOR,CERAMIC 0.1MF/25V
C281	1-164-004-11	s	CAPACITOR,CERAMIC 0.1MF/25V
C282	1-164-004-11	s	CAPACITOR,CERAMIC 0.1MF/25V
C283	1-164-004-11	s	CAPACITOR,CERAMIC 0.1MF/25V
C284	1-164-004-11	s	CAPACITOR,CERAMIC 0.1MF/25V
C285	1-164-004-11	s	CAPACITOR,CERAMIC 0.1MF/25V
C286	1-164-004-11	s	CAPACITOR,CERAMIC 0.1MF/25V
C287	1-164-004-11	s	CAPACITOR,CERAMIC 0.1MF/25V
C288	1-164-004-11	s	CAPACITOR,CERAMIC 0.1MF/25V
C289	1-164-004-11	s	CAPACITOR,CERAMIC 0.1MF/25V
C290	1-164-004-11	s	CAPACITOR,CERAMIC 0.1MF/25V
C291	1-164-004-11	s	CAPACITOR,CERAMIC 0.1MF/25V
C292	1-164-004-11	s	CAPACITOR,CERAMIC 0.1MF/25V
C293	1-164-004-11	s	CAPACITOR,CERAMIC 0.1MF/25V
C294	1-164-004-11	s	CAPACITOR,CERAMIC 0.1MF/25V
C295	1-164-004-11	s	CAPACITOR,CERAMIC 0.1MF/25V
C296	1-164-004-11	s	CAPACITOR,CERAMIC 0.1MF/25V
C297	1-164-004-11	s	CAPACITOR,CERAMIC 0.1MF/25V
C298	1-164-004-11	s	CAPACITOR,CERAMIC 0.1MF/25V
C299	1-164-004-11	s	CAPACITOR,CERAMIC 0.1MF/25V
C300	1-126-396-11	s	CAPACITOR,ELECT 47MF/16V(CHIP)
C304	1-164-004-11	s	CAPACITOR,CERAMIC 0.1MF/25V
C305	1-163-243-11	s	CAPACITOR CHIP CERAMIC 47PF/50
C312	1-164-004-11	s	CAPACITOR,CERAMIC 0.1MF/25V
C313	1-163-113-00	s	CAPACITOR,CHIP CERAMIC 68PF/50
C314	1-163-113-00	s	CAPACITOR,CHIP CERAMIC 68PF/50
C315	1-163-113-00	s	CAPACITOR,CHIP CERAMIC 68PF/50
C317	1-164-004-11	s	CAPACITOR,CERAMIC 0.1MF/25V
C318	1-164-161-11	s	CAPACITOR, CERAMIC 2200PF/100V
C320	1-126-401-11	s	CAPACITOR, ELECT 1MF/50V(CHIP)
C500	1-164-004-11	s	CAPACITOR,CERAMIC 0.1MF/25V
C501	1-164-004-11	s	CAPACITOR,CERAMIC 0.1MF/25V
C502	1-128-416-11	s	CAPACITOR ELECT 100MF/16V(105C
C503	1-164-004-11	s	CAPACITOR,CERAMIC 0.1MF/25V
C504	1-164-004-11	s	CAPACITOR,CERAMIC 0.1MF/25V
C506	1-164-004-11	s	CAPACITOR,CERAMIC 0.1MF/25V
C507	1-164-004-11	s	CAPACITOR,CERAMIC 0.1MF/25V
C508	1-164-004-11	s	CAPACITOR,CERAMIC 0.1MF/25V
C509	1-164-004-11	s	CAPACITOR,CERAMIC 0.1MF/25V
C510	1-164-004-11	s	CAPACITOR,CERAMIC 0.1MF/25V
C511	1-164-004-11	s	CAPACITOR,CERAMIC 0.1MF/25V
C512	1-126-396-11	s	CAPACITOR,ELECT 47MF/16V(CHIP)
C513	1-126-396-11	s	CAPACITOR,ELECT 47MF/16V(CHIP)
C514	1-164-004-11	s	CAPACITOR,CERAMIC 0.1MF/25V
C515	1-164-004-11	s	CAPACITOR,CERAMIC 0.1MF/25V
C516	1-164-004-11	s	CAPACITOR,CERAMIC 0.1MF/25V
C517	1-164-004-11	s	CAPACITOR,CERAMIC 0.1MF/25V
C519	1-164-004-11	s	CAPACITOR,CERAMIC 0.1MF/25V
C520	1-164-004-11	s	CAPACITOR,CERAMIC 0.1MF/25V
C521	1-164-004-11	s	CAPACITOR,CERAMIC 0.1MF/25V
C522	1-164-004-11	s	CAPACITOR,CERAMIC 0.1MF/25V
C523	1-126-396-11	s	CAPACITOR,ELECT 47MF/16V(CHIP)
C524	1-164-004-11	s	CAPACITOR,CERAMIC 0.1MF/25V
C525	1-126-396-11	s	CAPACITOR,ELECT 47MF/16V(CHIP)

(B BOARD)

Ref. No. or Q'ty	Part No.	SP	Description
C526	1-164-004-11	s	CAPACITOR,CERAMIC 0.1MF/25V
C527	1-164-004-11	s	CAPACITOR,CERAMIC 0.1MF/25V
C528	1-164-004-11	s	CAPACITOR,CERAMIC 0.1MF/25V
C529	1-164-004-11	s	CAPACITOR,CERAMIC 0.1MF/25V
C530	1-164-004-11	s	CAPACITOR,CERAMIC 0.1MF/25V
C531	1-164-004-11	s	CAPACITOR,CERAMIC 0.1MF/25V
C532	1-163-227-11	s	CAPACITOR CERAMIC 10PF/50V(CH)
C533	1-164-004-11	s	CAPACITOR,CERAMIC 0.1MF/25V
C534	1-163-227-11	s	CAPACITOR CERAMIC 10PF/50V(CH)
C535	1-164-004-11	s	CAPACITOR,CERAMIC 0.1MF/25V
C536	1-164-004-11	s	CAPACITOR,CERAMIC 0.1MF/25V
C537	1-164-004-11	s	CAPACITOR,CERAMIC 0.1MF/25V
C538	1-163-133-00	s	CAPACITOR,CHIP CERAMIC 470PF
C539	1-164-004-11	s	CAPACITOR,CERAMIC 0.1MF/25V
C540	1-164-004-11	s	CAPACITOR,CERAMIC 0.1MF/25V
C541	1-164-004-11	s	CAPACITOR,CERAMIC 0.1MF/25V
C542	1-164-004-11	s	CAPACITOR,CERAMIC 0.1MF/25V
C543	1-164-004-11	s	CAPACITOR,CERAMIC 0.1MF/25V
C544	1-164-004-11	s	CAPACITOR,CERAMIC 0.1MF/25V
C545	1-125-838-11	s	CAPACITOR, CERAMIC 2.2MF/6.3V
C546	1-125-838-11	s	CAPACITOR, CERAMIC 2.2MF/6.3V
C547	1-163-021-91	s	CAPACITOR, CERAMIC 0.01MF/50V
C548	1-164-004-11	s	CAPACITOR,CERAMIC 0.1MF/25V
C549	1-164-004-11	s	CAPACITOR,CERAMIC 0.1MF/25V
C550	1-163-253-11	s	CAPACITOR CERAMIC 120PF/50V
C551	1-163-253-11	s	CAPACITOR CERAMIC 120PF/50V
C552	1-163-253-11	s	CAPACITOR CERAMIC 120PF/50V
C553	1-163-253-11	s	CAPACITOR CERAMIC 120PF/50V
C554	1-163-275-11	s	CAPACITOR CERAMIC 1000PF/50V
C555	1-164-004-11	s	CAPACITOR,CERAMIC 0.1MF/25V
C556	1-163-253-11	s	CAPACITOR CERAMIC 120PF/50V
C557	1-163-021-91	s	CAPACITOR, CERAMIC 0.01MF/50V
C560	1-163-233-11	s	CAPACITOR,CHIP CERAMIC 18PF/50
C703	1-126-396-11	s	CAPACITOR,ELECT 47MF/16V(CHIP)
C704	1-126-392-11	s	CAPACITOR,CHIP ELECT100MF/6.3V
C705	1-126-392-11	s	CAPACITOR,CHIP ELECT100MF/6.3V
C706	1-126-392-11	s	CAPACITOR,CHIP ELECT100MF/6.3V
C707	1-126-392-11	s	CAPACITOR,CHIP ELECT100MF/6.3V
C708	1-164-004-11	s	CAPACITOR,CERAMIC 0.1MF/25V
C709	1-164-004-11	s	CAPACITOR,CERAMIC 0.1MF/25V
C710	1-126-396-11	s	CAPACITOR,ELECT 47MF/16V(CHIP)
C711	1-164-004-11	s	CAPACITOR,CERAMIC 0.1MF/25V
C712	1-164-004-11	s	CAPACITOR,CERAMIC 0.1MF/25V
C713	1-164-004-11	s	CAPACITOR,CERAMIC 0.1MF/25V
C714	1-164-004-11	s	CAPACITOR,CERAMIC 0.1MF/25V
C715	1-126-400-11	s	CAPACITOR ELECT 22MF/35V(CHIP)
C716	1-164-004-11	s	CAPACITOR,CERAMIC 0.1MF/25V
C717	1-126-400-11	s	CAPACITOR ELECT 22MF/35V(CHIP)
C718	1-115-670-11	s	CAPACITOR ELECT 220MF/35V(CHIP
C719	1-115-670-11	s	CAPACITOR ELECT 220MF/35V(CHIP
C720	1-126-396-11	s	CAPACITOR,ELECT 47MF/16V(CHIP)
C721	1-164-004-11	s	CAPACITOR,CERAMIC 0.1MF/25V
C801	1-128-396-11	s	CAPACITOR,ELECT 470MF/10V CHIP
C927	1-125-817-11	s	CAPACITOR, CERAMIC 10MF/6.3V
C928	1-115-459-11	s	CAPACITOR,ELECT 47MF/6.3V(BP)
C937	1-125-817-11	s	CAPACITOR, CERAMIC 10MF/6.3V
C938	1-115-459-11	s	CAPACITOR,ELECT 47MF/6.3V(BP)
C1000	1-163-229-11	s	CAPACITOR CHIP 12PF/50V(2125)
C1001	1-163-089-00	s	CAPACITOR,CHIP CERAMIC 6.0PF

(B BOARD)

Ref. No. or Q'ty	Part No.	SP	Description
C1002	1-107-781-11	s	CAPACITOR,ELECT 47MF/16V(BP)
C1003	1-164-004-11	s	CAPACITOR,CERAMIC 0.1MF/25V
C1004	1-107-781-11	s	CAPACITOR,ELECT 47MF/16V(BP)
C1005	1-164-004-11	s	CAPACITOR,CERAMIC 0.1MF/25V
C1006	1-107-781-11	s	CAPACITOR,ELECT 47MF/16V(BP)
C1007	1-164-004-11	s	CAPACITOR,CERAMIC 0.1MF/25V
C1008	1-126-396-11	s	CAPACITOR,ELECT 47MF/16V(CHIP)
C1009	1-126-396-11	s	CAPACITOR,ELECT 47MF/16V(CHIP)
C1010	1-126-396-11	s	CAPACITOR,ELECT 47MF/16V(CHIP)
C1011	1-164-004-11	s	CAPACITOR,CERAMIC 0.1MF/25V
C1012	1-164-004-11	s	CAPACITOR,CERAMIC 0.1MF/25V
C1013	1-126-396-11	s	CAPACITOR,ELECT 47MF/16V(CHIP)
C1014	1-164-004-11	s	CAPACITOR,CERAMIC 0.1MF/25V
C1015	1-163-021-91	s	CAPACITOR, CERAMIC 0.01MF/50V
C1016	1-126-401-11	s	CAPACITOR, ELECT 1MF/50V(CHIP)
C1017	1-164-004-11	s	CAPACITOR,CERAMIC 0.1MF/25V
C1018	1-126-396-11	s	CAPACITOR,ELECT 47MF/16V(CHIP)
C1019	1-164-004-11	s	CAPACITOR,CERAMIC 0.1MF/25V
C1020	1-164-004-11	s	CAPACITOR,CERAMIC 0.1MF/25V
C1021	1-126-396-11	s	CAPACITOR,ELECT 47MF/16V(CHIP)
C1022	1-164-004-11	s	CAPACITOR,CERAMIC 0.1MF/25V
C1023	1-164-004-11	s	CAPACITOR,CERAMIC 0.1MF/25V
C1024	1-126-398-11	s	CAPACITOR ELECT 4.7MF/35V(CHIP
C1025	1-126-396-11	s	CAPACITOR,ELECT 47MF/16V(CHIP)
C1026	1-164-004-11	s	CAPACITOR,CERAMIC 0.1MF/25V
C1027	1-107-781-11	s	CAPACITOR,ELECT 47MF/16V(BP)
C1028	1-164-004-11	s	CAPACITOR,CERAMIC 0.1MF/25V
C1029	1-107-781-11	s	CAPACITOR,ELECT 47MF/16V(BP)
C1030	1-164-004-11	s	CAPACITOR,CERAMIC 0.1MF/25V
C1031	1-126-405-11	s	CAPACITOR,ELECT 10MF/50V(CHIP
C1032	1-126-405-11	s	CAPACITOR,ELECT 10MF/50V(CHIP
C1033	1-164-004-11	s	CAPACITOR,CERAMIC 0.1MF/25V
C1034	1-126-396-11	s	CAPACITOR,ELECT 47MF/16V(CHIP)
C1035	1-164-004-11	s	CAPACITOR,CERAMIC 0.1MF/25V
C1036	1-164-004-11	s	CAPACITOR,CERAMIC 0.1MF/25V
C1037	1-109-982-11	s	CAPACITOR,CHIP CERAMIC 1MF/10V
C1038	1-128-416-11	s	CAPACITOR ELECT 100MF/16V(105C
C1039	1-164-004-11	s	CAPACITOR,CERAMIC 0.1MF/25V
C1040	1-164-004-11	s	CAPACITOR,CERAMIC 0.1MF/25V
C1041	1-164-004-11	s	CAPACITOR,CERAMIC 0.1MF/25V
C1042	1-164-004-11	s	CAPACITOR,CERAMIC 0.1MF/25V
C1043	1-126-401-11	s	CAPACITOR, ELECT 1MF/50V(CHIP)
C1044	1-128-416-11	s	CAPACITOR ELECT 100MF/16V(105C
C1045	1-164-346-11	s	CAPACITOR CHIP CERAMIC 1MF/16V
C1046	1-164-004-11	s	CAPACITOR,CERAMIC 0.1MF/25V
C1047	1-164-004-11	s	CAPACITOR,CERAMIC 0.1MF/25V
C1048	1-164-004-11	s	CAPACITOR,CERAMIC 0.1MF/25V
C1049	1-126-396-11	s	CAPACITOR,ELECT 47MF/16V(CHIP)
C1050	1-126-396-11	s	CAPACITOR,ELECT 47MF/16V(CHIP)
C1051	1-126-396-11	s	CAPACITOR,ELECT 47MF/16V(CHIP)
C1052	1-126-396-11	s	CAPACITOR,ELECT 47MF/16V(CHIP)
C1053	1-164-004-11	s	CAPACITOR,CERAMIC 0.1MF/25V
C1055	1-163-251-11	s	CAPACITOR CERAMIC 100PF/50V
C1056	1-164-004-11	s	CAPACITOR,CERAMIC 0.1MF/25V
C1057	1-164-004-11	s	CAPACITOR,CERAMIC 0.1MF/25V
C1058	1-163-102-00	s	CAPACITOR,CHIP CERAMIC 24PF/50
C1059	1-164-004-11	s	CAPACITOR,CERAMIC 0.1MF/25V
C1060	1-164-004-11	s	CAPACITOR,CERAMIC 0.1MF/25V
C1061	1-163-102-00	s	CAPACITOR,CHIP CERAMIC 24PF/50

(B BOARD)

Ref. No. or Q'ty	Part No.	SP	Description
C1062	1-164-004-11	s	CAPACITOR,CERAMIC 0.1MF/25V
C1063	1-164-004-11	s	CAPACITOR,CERAMIC 0.1MF/25V
C1064	1-126-392-11	s	CAPACITOR,CHIP ELECT100MF/6.3V
C1065	1-163-113-00	s	CAPACITOR CERAMIC 68PF/50V
C1066	1-163-231-11	s	CAPACITOR,CHIP CERAMIC15PF/50V
C1067	1-164-004-11	s	CAPACITOR,CERAMIC 0.1MF/25V
C1068	1-126-396-11	s	CAPACITOR,ELECT 47MF/16V(CHIP)
C1069	1-164-346-11	s	CAPACITOR CHIP CERAMIC 1MF/16V
C1070	1-164-004-11	s	CAPACITOR,CERAMIC 0.1MF/25V
C1071	1-115-154-11	s	CAPACITOR ELECT 10MF/16V(BP)
C1072	1-163-241-11	s	CAPACITOR,CHIP CERAMIC 39PF/50
C1073	1-164-004-11	s	CAPACITOR,CERAMIC 0.1MF/25V
C1074	1-164-004-11	s	CAPACITOR,CERAMIC 0.1MF/25V
C1075	1-164-004-11	s	CAPACITOR,CERAMIC 0.1MF/25V
C1076	1-164-004-11	s	CAPACITOR,CERAMIC 0.1MF/25V
C1077	1-164-004-11	s	CAPACITOR,CERAMIC 0.1MF/25V
C1078	1-164-004-11	s	CAPACITOR,CERAMIC 0.1MF/25V
C1079	1-126-396-11	s	CAPACITOR,ELECT 47MF/16V(CHIP)
C1080	1-164-004-11	s	CAPACITOR,CERAMIC 0.1MF/25V
C1081	1-164-004-11	s	CAPACITOR,CERAMIC 0.1MF/25V
C1082	1-164-346-11	s	CAPACITOR CHIP CERAMIC 1MF/16V
C1083	1-164-004-11	s	CAPACITOR,CERAMIC 0.1MF/25V
C1084	1-164-004-11	s	CAPACITOR,CERAMIC 0.1MF/25V
C1085	1-163-021-91	s	CAPACITOR, CERAMIC 0.01MF/50V
C1086	1-164-004-11	s	CAPACITOR,CERAMIC 0.1MF/25V
C1087	1-164-004-11	s	CAPACITOR,CERAMIC 0.1MF/25V
C1088	1-163-021-91	s	CAPACITOR, CERAMIC 0.01MF/50V
C1089	1-164-004-11	s	CAPACITOR,CERAMIC 0.1MF/25V
C1090	1-164-004-11	s	CAPACITOR,CERAMIC 0.1MF/25V
C1091	1-164-004-11	s	CAPACITOR,CERAMIC 0.1MF/25V
C1092	1-164-004-11	s	CAPACITOR,CERAMIC 0.1MF/25V
C1093	1-164-004-11	s	CAPACITOR,CERAMIC 0.1MF/25V
C1094	1-164-004-11	s	CAPACITOR,CERAMIC 0.1MF/25V
C1095	1-164-004-11	s	CAPACITOR,CERAMIC 0.1MF/25V
C1096	1-164-004-11	s	CAPACITOR,CERAMIC 0.1MF/25V
C1097	1-164-004-11	s	CAPACITOR,CERAMIC 0.1MF/25V
C1098	1-163-809-11	s	CAPACITOR,CHIP CERAMIC 0.047MF
C1099	1-107-781-11	s	CAPACITOR,ELECT 47MF/16V(BP)
C1100	1-164-004-11	s	CAPACITOR,CERAMIC 0.1MF/25V
C1101	1-163-809-11	s	CAPACITOR,CHIP CERAMIC 0.047MF
C1102	1-164-004-11	s	CAPACITOR,CERAMIC 0.1MF/25V
C1103	1-163-809-11	s	CAPACITOR,CHIP CERAMIC 0.047MF
C1104	1-164-004-11	s	CAPACITOR,CERAMIC 0.1MF/25V
C1105	1-164-004-11	s	CAPACITOR,CERAMIC 0.1MF/25V
C1106	1-163-253-11	s	CAPACITOR CERAMIC 120PF/50V
C1107	1-163-235-11	s	CAPACITOR,CHIP CERAMIC22PF/50V
C1108	1-107-781-11	s	CAPACITOR,ELECT 47MF/16V(BP)
C1109	1-126-401-11	s	CAPACITOR, ELECT 1MF/50V(CHIP)
C1110	1-164-004-11	s	CAPACITOR,CERAMIC 0.1MF/25V
C1111	1-164-162-11	s	CAPACITOR,CHIP CERAMIC 100PF
C1112	1-126-401-11	s	CAPACITOR, ELECT 1MF/50V(CHIP)
C1113	1-164-004-11	s	CAPACITOR,CERAMIC 0.1MF/25V
C1115	1-126-396-11	s	CAPACITOR,ELECT 47MF/16V(CHIP)
C1116	1-164-004-11	s	CAPACITOR,CERAMIC 0.1MF/25V
C1117	1-164-004-11	s	CAPACITOR,CERAMIC 0.1MF/25V
C1118	1-164-004-11	s	CAPACITOR,CERAMIC 0.1MF/25V
C1119	1-164-004-11	s	CAPACITOR,CERAMIC 0.1MF/25V
C1120	1-164-004-11	s	CAPACITOR,CERAMIC 0.1MF/25V
C1121	1-107-781-11	s	CAPACITOR,ELECT 47MF/16V(BP)

(B BOARD)

Ref. No. or Q'ty	Part No.	SP	Description
C1122	1-164-004-11	s	CAPACITOR,CERAMIC 0.1MF/25V
C1123	1-164-004-11	s	CAPACITOR,CERAMIC 0.1MF/25V
C1124	1-126-396-11	s	CAPACITOR,ELECT 47MF/16V(CHIP)
C1125	1-164-004-11	s	CAPACITOR,CERAMIC 0.1MF/25V
C1126	1-164-004-11	s	CAPACITOR,CERAMIC 0.1MF/25V
C1127	1-164-182-11	s	CAPACITOR, CERAMIC 3300PF/100V
C1128	1-164-344-11	s	CAPACITOR CERAMIC 68000PF (M-)
C1129	1-164-004-11	s	CAPACITOR,CERAMIC 0.1MF/25V
C1130	1-163-259-91	s	CAPACITOR,CHIP CERAMIC 220PF
C1131	1-164-004-11	s	CAPACITOR,CERAMIC 0.1MF/25V
C1132	1-164-004-11	s	CAPACITOR,CERAMIC 0.1MF/25V
C1133	1-164-004-11	s	CAPACITOR,CERAMIC 0.1MF/25V
C1134	1-164-004-11	s	CAPACITOR,CERAMIC 0.1MF/25V
C1135	1-164-004-11	s	CAPACITOR,CERAMIC 0.1MF/25V
C1136	1-164-004-11	s	CAPACITOR,CERAMIC 0.1MF/25V
C1137	1-126-396-11	s	CAPACITOR,ELECT 47MF/16V(CHIP)
C1138	1-137-993-11	s	CAP, CHIP ELECT 470MF/16V
C1139	1-164-004-11	s	CAPACITOR,CERAMIC 0.1MF/25V
C1140	1-164-004-11	s	CAPACITOR,CERAMIC 0.1MF/25V
C1141	1-164-004-11	s	CAPACITOR,CERAMIC 0.1MF/25V
C1142	1-164-004-11	s	CAPACITOR,CERAMIC 0.1MF/25V
C1143	1-137-993-11	s	CAP, CHIP ELECT 470MF/16V
C1144	1-126-396-11	s	CAPACITOR,ELECT 47MF/16V(CHIP)
C1145	1-164-004-11	s	CAPACITOR,CERAMIC 0.1MF/25V
C1146	1-164-004-11	s	CAPACITOR,CERAMIC 0.1MF/25V
C1147	1-164-004-11	s	CAPACITOR,CERAMIC 0.1MF/25V
C1148	1-164-004-11	s	CAPACITOR,CERAMIC 0.1MF/25V
C1149	1-164-004-11	s	CAPACITOR,CERAMIC 0.1MF/25V
C1150	1-164-004-11	s	CAPACITOR,CERAMIC 0.1MF/25V
C1151	1-164-004-11	s	CAPACITOR,CERAMIC 0.1MF/25V
C1152	1-164-004-11	s	CAPACITOR,CERAMIC 0.1MF/25V
C1153	1-164-004-11	s	CAPACITOR,CERAMIC 0.1MF/25V
C1154	1-126-396-11	s	CAPACITOR,ELECT 47MF/16V(CHIP)
C1155	1-126-405-11	s	CAPACITOR,ELECT 10MF/50V(CHIP
C1156	1-126-405-11	s	CAPACITOR,ELECT 10MF/50V(CHIP
C1157	1-164-004-11	s	CAPACITOR,CERAMIC 0.1MF/25V
C1158	1-164-004-11	s	CAPACITOR,CERAMIC 0.1MF/25V
C1159	1-164-004-11	s	CAPACITOR,CERAMIC 0.1MF/25V
C1160	1-126-396-11	s	CAPACITOR,ELECT 47MF/16V(CHIP)
C1161	1-164-004-11	s	CAPACITOR,CERAMIC 0.1MF/25V
C1162	1-126-405-11	s	CAPACITOR,ELECT 10MF/50V(CHIP
C1164	1-126-392-11	s	CAPACITOR,CHIP ELECT100MF/6.3V
C1165	1-126-405-11	s	CAPACITOR,ELECT 10MF/50V(CHIP
C1168	1-126-405-11	s	CAPACITOR,ELECT 10MF/50V(CHIP
C1169	1-163-021-91	s	CAPACITOR, CERAMIC 0.01MF/50V
C1170	1-126-396-11	s	CAPACITOR,ELECT 47MF/16V(CHIP)
C1171	1-164-004-11	s	CAPACITOR,CERAMIC 0.1MF/25V
C1172	1-164-004-11	s	CAPACITOR,CERAMIC 0.1MF/25V
C1173	1-164-004-11	s	CAPACITOR,CERAMIC 0.1MF/25V
C1174	1-126-396-11	s	CAPACITOR,ELECT 47MF/16V(CHIP)
C1175	1-163-243-11	s	CAPACITOR CHIP CERAMIC 47PF/50
C1176	1-164-004-11	s	CAPACITOR,CERAMIC 0.1MF/25V
C1177	1-164-004-11	s	CAPACITOR,CERAMIC 0.1MF/25V
C1178	1-164-004-11	s	CAPACITOR,CERAMIC 0.1MF/25V
C1179	1-164-004-11	s	CAPACITOR,CERAMIC 0.1MF/25V
C1182	1-164-004-11	s	CAPACITOR,CERAMIC 0.1MF/25V
C1183	1-126-405-11	s	CAPACITOR,ELECT 10MF/50V(CHIP
C1184	1-126-392-11	s	CAPACITOR,CHIP ELECT100MF/6.3V
C1185	1-164-004-11	s	CAPACITOR,CERAMIC 0.1MF/25V

(B BOARD)

Ref. No. or Q'ty	Part No.	SP	Description
C1186	1-126-396-11	s	CAPACITOR,ELECT 47MF/16V(CHIP)
C1187	1-126-396-11	s	CAPACITOR,ELECT 47MF/16V(CHIP)
C1188	1-164-004-11	s	CAPACITOR,CERAMIC 0.1MF/25V
C1189	1-126-396-11	s	CAPACITOR,ELECT 47MF/16V(CHIP)
C1190	1-164-004-11	s	CAPACITOR,CERAMIC 0.1MF/25V
C1191	1-126-396-11	s	CAPACITOR,ELECT 47MF/16V(CHIP)
C1192	1-164-004-11	s	CAPACITOR,CERAMIC 0.1MF/25V
C1193	1-164-004-11	s	CAPACITOR,CERAMIC 0.1MF/25V
C1194	1-164-004-11	s	CAPACITOR,CERAMIC 0.1MF/25V
C1195	1-164-004-11	s	CAPACITOR,CERAMIC 0.1MF/25V
C1196	1-164-004-11	s	CAPACITOR,CERAMIC 0.1MF/25V
C1197	1-164-004-11	s	CAPACITOR,CERAMIC 0.1MF/25V
C1198	1-164-004-11	s	CAPACITOR,CERAMIC 0.1MF/25V
C1199	1-164-004-11	s	CAPACITOR,CERAMIC 0.1MF/25V
C1200	1-164-004-11	s	CAPACITOR,CERAMIC 0.1MF/25V
C1201	1-164-004-11	s	CAPACITOR,CERAMIC 0.1MF/25V
C1202	1-164-004-11	s	CAPACITOR,CERAMIC 0.1MF/25V
C1203	1-164-004-11	s	CAPACITOR,CERAMIC 0.1MF/25V
C1204	1-164-004-11	s	CAPACITOR,CERAMIC 0.1MF/25V
C1205	1-164-004-11	s	CAPACITOR,CERAMIC 0.1MF/25V
C1206	1-164-004-11	s	CAPACITOR,CERAMIC 0.1MF/25V
C1207	1-164-004-11	s	CAPACITOR,CERAMIC 0.1MF/25V
C1208	1-164-004-11	s	CAPACITOR,CERAMIC 0.1MF/25V
C1209	1-164-004-11	s	CAPACITOR,CERAMIC 0.1MF/25V
C1210	1-164-004-11	s	CAPACITOR,CERAMIC 0.1MF/25V
C1211	1-164-004-11	s	CAPACITOR,CERAMIC 0.1MF/25V
C1212	1-164-004-11	s	CAPACITOR,CERAMIC 0.1MF/25V
C1213	1-164-004-11	s	CAPACITOR,CERAMIC 0.1MF/25V
C1214	1-164-004-11	s	CAPACITOR,CERAMIC 0.1MF/25V
C1215	1-164-004-11	s	CAPACITOR,CERAMIC 0.1MF/25V
C1216	1-126-392-11	s	CAPACITOR,CHIP ELECT100MF/6.3V
C1217	1-164-004-11	s	CAPACITOR,CERAMIC 0.1MF/25V
C1218	1-164-004-11	s	CAPACITOR,CERAMIC 0.1MF/25V
C1219	1-164-004-11	s	CAPACITOR,CERAMIC 0.1MF/25V
C1220	1-164-004-11	s	CAPACITOR,CERAMIC 0.1MF/25V
C1221	1-164-004-11	s	CAPACITOR,CERAMIC 0.1MF/25V
C1222	1-164-004-11	s	CAPACITOR,CERAMIC 0.1MF/25V
C1223	1-164-004-11	s	CAPACITOR,CERAMIC 0.1MF/25V
C1224	1-164-004-11	s	CAPACITOR,CERAMIC 0.1MF/25V
C1225	1-126-396-11	s	CAPACITOR,ELECT 47MF/16V(CHIP)
C1226	1-164-004-11	s	CAPACITOR,CERAMIC 0.1MF/25V
C1227	1-164-004-11	s	CAPACITOR,CERAMIC 0.1MF/25V
C1228	1-164-004-11	s	CAPACITOR,CERAMIC 0.1MF/25V
C1229	1-126-396-11	s	CAPACITOR,ELECT 47MF/16V(CHIP)
C1230	1-126-398-11	s	CAPACITOR ELECT 4.7MF/35V(CHIP
C1231	1-126-396-11	s	CAPACITOR,ELECT 47MF/16V(CHIP)
C1232	1-164-004-11	s	CAPACITOR,CERAMIC 0.1MF/25V
C1233	1-163-021-91	s	CAPACITOR, CERAMIC 0.01MF/50V
C1234	1-164-004-11	s	CAPACITOR,CERAMIC 0.1MF/25V
C1235	1-164-004-11	s	CAPACITOR,CERAMIC 0.1MF/25V
C1236	1-126-396-11	s	CAPACITOR,ELECT 47MF/16V(CHIP)
C1237	1-126-396-11	s	CAPACITOR,ELECT 47MF/16V(CHIP)
C1238	1-126-396-11	s	CAPACITOR,ELECT 47MF/16V(CHIP)
C1239	1-126-405-11	s	CAPACITOR,ELECT 10MF/50V(CHIP
C1240	1-164-004-11	s	CAPACITOR,CERAMIC 0.1MF/25V
C1241	1-164-004-11	s	CAPACITOR,CERAMIC 0.1MF/25V
C1242	1-164-004-11	s	CAPACITOR,CERAMIC 0.1MF/25V
C1243	1-164-004-11	s	CAPACITOR,CERAMIC 0.1MF/25V
C1244	1-164-004-11	s	CAPACITOR,CERAMIC 0.1MF/25V

(B BOARD)

Ref. No. or Q'ty	Part No.	SP	Description
C1245	1-164-004-11	s	CAPACITOR,CERAMIC 0.1MF/25V
C1246	1-164-004-11	s	CAPACITOR,CERAMIC 0.1MF/25V
C1247	1-164-004-11	s	CAPACITOR,CERAMIC 0.1MF/25V
C1248	1-164-004-11	s	CAPACITOR,CERAMIC 0.1MF/25V
C1249	1-126-405-11	s	CAPACITOR,ELECT 10MF/50V(CHIP
C1250	1-164-004-11	s	CAPACITOR,CERAMIC 0.1MF/25V
C1251	1-126-396-11	s	CAPACITOR,ELECT 47MF/16V(CHIP)
C1252	1-126-396-11	s	CAPACITOR,ELECT 47MF/16V(CHIP)
C1260	1-164-004-11	s	CAPACITOR,CERAMIC 0.1MF/25V
C1261	1-164-004-11	s	CAPACITOR,CERAMIC 0.1MF/25V
C1262	1-164-004-11	s	CAPACITOR,CERAMIC 0.1MF/25V
C1263	1-163-243-11	s	CAPACITOR CHIP CERAMIC 47PF/50
C1264	1-163-243-11	s	CAPACITOR CHIP CERAMIC 47PF/50
C1265	1-163-243-11	s	CAPACITOR CHIP CERAMIC 47PF/50
C1266	1-163-243-11	s	CAPACITOR CHIP CERAMIC 47PF/50
C1267	1-163-243-11	s	CAPACITOR CHIP CERAMIC 47PF/50
C1268	1-163-243-11	s	CAPACITOR CHIP CERAMIC 47PF/50
C1269	1-164-004-11	s	CAPACITOR,CERAMIC 0.1MF/25V
C1270	1-164-004-11	s	CAPACITOR,CERAMIC 0.1MF/25V
C1271	1-163-235-11	s	CAPACITOR,CHIP CERAMIC22PF/50V
C1278	1-126-392-11	s	CAPACITOR,CHIP ELECT100MF/6.3V
C1282	1-164-004-11	s	CAPACITOR,CERAMIC 0.1MF/25V
C1283	1-128-416-11	s	CAPACITOR ELECT 100MF/16V
C4000	1-126-405-11	s	CAPACITOR,ELECT 10MF/50V(CHIP
C4001	1-128-416-11	s	CAPACITOR ELECT 100MF/16V(105C
C4002	1-164-004-11	s	CAPACITOR,CERAMIC 0.1MF/25V
C4003	1-163-275-11	s	CAPACITOR CERAMIC 1000PF/50V
C4004	1-126-405-11	s	CAPACITOR,ELECT 10MF/50V(CHIP
C4005	1-164-004-11	s	CAPACITOR,CERAMIC 0.1MF/25V
C4006	1-164-004-11	s	CAPACITOR,CERAMIC 0.1MF/25V
C4007	1-164-004-11	s	CAPACITOR,CERAMIC 0.1MF/25V
C4008	1-163-021-91	s	CAPACITOR, CERAMIC 0.01MF/50V
C4009	1-126-405-11	s	CAPACITOR,ELECT 10MF/50V(CHIP
C4010	1-164-004-11	s	CAPACITOR,CERAMIC 0.1MF/25V
C4011	1-126-405-11	s	CAPACITOR,ELECT 10MF/50V(CHIP
C4012	1-126-405-11	s	CAPACITOR,ELECT 10MF/50V(CHIP
C4013	1-126-405-11	s	CAPACITOR,ELECT 10MF/50V(CHIP
C4014	1-163-021-91	s	CAPACITOR, CERAMIC 0.01MF/50V
C4015	1-128-416-11	s	CAPACITOR ELECT 100MF/16V(105C
C4016	1-164-004-11	s	CAPACITOR,CERAMIC 0.1MF/25V
C4017	1-164-489-11	s	CAPACITOR,CHIP CERAMIC 0.22MF
C4018	1-163-275-11	s	CAPACITOR CERAMIC 1000PF/50V
C4019	1-163-021-91	s	CAPACITOR, CERAMIC 0.01MF/50V
C4020	1-163-021-91	s	CAPACITOR, CERAMIC 0.01MF/50V
C4021	1-164-004-11	s	CAPACITOR,CERAMIC 0.1MF/25V
C4022	1-128-416-11	s	CAPACITOR ELECT 100MF/16V(105C
C4023	1-128-416-11	s	CAPACITOR ELECT 100MF/16V(105C
C4024	1-163-113-00	s	CAPACITOR,CHIP CERAMIC 68PF/50
C4025	1-164-004-11	s	CAPACITOR,CERAMIC 0.1MF/25V
C4026	1-164-004-11	s	CAPACITOR,CERAMIC 0.1MF/25V
C4027	1-164-004-11	s	CAPACITOR,CERAMIC 0.1MF/25V
C4028	1-163-275-11	s	CAPACITOR CERAMIC 1000PF/50V
C4029	1-163-233-11	s	CAPACITOR,CHIP CERAMIC 18PF/50
C4030	1-163-235-11	s	CAPACITOR,CHIP CERAMIC22PF/50V
C4031	1-115-670-11	s	CAPACITOR ELECT 220MF/35V(CHIP
C4032	1-164-004-11	s	CAPACITOR,CERAMIC 0.1MF/25V
C4033	1-163-021-91	s	CAPACITOR, CERAMIC 0.01MF/50V
C4034	1-164-004-11	s	CAPACITOR,CERAMIC 0.1MF/25V
C4035	1-163-021-91	s	CAPACITOR, CERAMIC 0.01MF/50V

(B BOARD)

Ref. No. or Q'ty	Part No.	SP	Description
C4036	1-163-245-11	s	CAPACITOR CERAMIC 56PF/50V
C4037	1-163-809-11	s	CAPACITOR,CHIP CERAMIC 0.047MF
C4038	1-163-275-11	s	CAPACITOR CERAMIC 1000PF/50V
C4039	1-164-004-11	s	CAPACITOR,CERAMIC 0.1MF/25V
C4040	1-163-133-00	s	CAPACITOR,CHIP CERAMIC 470PF
C4041	1-164-004-11	s	CAPACITOR,CERAMIC 0.1MF/25V
C4042	1-126-405-11	s	CAPACITOR,ELECT 10MF/50V(CHIP
C4043	1-164-004-11	s	CAPACITOR,CERAMIC 0.1MF/25V
C4044	1-164-004-11	s	CAPACITOR,CERAMIC 0.1MF/25V
C4045	1-163-127-00	s	CAPACITOR,CHIP CERAMIC 270PF
C4046	1-164-004-11	s	CAPACITOR,CERAMIC 0.1MF/25V
C4047	1-164-004-11	s	CAPACITOR,CERAMIC 0.1MF/25V
C4048	1-164-004-11	s	CAPACITOR,CERAMIC 0.1MF/25V
C4049	1-164-004-11	s	CAPACITOR,CERAMIC 0.1MF/25V
C4050	1-164-004-11	s	CAPACITOR,CERAMIC 0.1MF/25V
C4051	1-164-004-11	s	CAPACITOR,CERAMIC 0.1MF/25V
C4052	1-164-004-11	s	CAPACITOR,CERAMIC 0.1MF/25V
C4053	1-164-004-11	s	CAPACITOR,CERAMIC 0.1MF/25V
C4054	1-164-004-11	s	CAPACITOR,CERAMIC 0.1MF/25V
C4055	1-163-253-11	s	CAPACITOR CERAMIC 120PF/50V
C4056	1-163-021-91	s	CAPACITOR, CERAMIC 0.01MF/50V
C4057	1-163-021-91	s	CAPACITOR, CERAMIC 0.01MF/50V
C4058	1-163-137-00	s	CAPACITOR,CHIP CERAMIC 680PF
C4059	1-163-263-11	s	CAPACITOR CERAMIC 330PF/50V
C4060	1-163-137-00	s	CAPACITOR,CHIP CERAMIC 680PF
C4061	1-163-092-00	s	CAPACITOR,CHIP CERAMIC 9PF/50V
C4062	1-163-021-91	s	CAPACITOR, CERAMIC 0.01MF/50V
C4063	1-163-227-11	s	CAPACITOR CERAMIC 10PF/50V(CH)
C4064	1-126-396-11	s	CAPACITOR,ELECT 47MF/16V(CHIP)
C4065	1-164-004-11	s	CAPACITOR,CERAMIC 0.1MF/25V
C4066	1-164-004-11	s	CAPACITOR,CERAMIC 0.1MF/25V
C4067	1-164-004-11	s	CAPACITOR,CERAMIC 0.1MF/25V
C4068	1-117-148-11	s	CAPACITOR,ELECT 4.7MF 50V
C4069	1-126-396-11	s	CAPACITOR,ELECT 47MF/16V(CHIP)
C4070	1-163-275-11	s	CAPACITOR CERAMIC 1000PF/50V
C4071	1-126-402-11	s	CAPACITOR, ELECT 2.2MF/50V
C4072	1-164-004-11	s	CAPACITOR,CERAMIC 0.1MF/25V
C4073	1-164-004-11	s	CAPACITOR,CERAMIC 0.1MF/25V
C4074	1-126-401-11	s	CAPACITOR, ELECT 1MF/50V(CHIP)
C4075	1-126-396-11	s	CAPACITOR,ELECT 47MF/16V(CHIP)
C4076	1-164-004-11	s	CAPACITOR,CERAMIC 0.1MF/25V
C4077	1-164-004-11	s	CAPACITOR,CERAMIC 0.1MF/25V
C4078	1-163-227-11	s	CAPACITOR CERAMIC 10PF/50V(CH)
C4079	1-126-396-11	s	CAPACITOR,ELECT 47MF/16V(CHIP)
C4080	1-126-396-11	s	CAPACITOR,ELECT 47MF/16V(CHIP)
C4081	1-164-004-11	s	CAPACITOR,CERAMIC 0.1MF/25V
C4082	1-164-004-11	s	CAPACITOR,CERAMIC 0.1MF/25V
C4083	1-163-021-91	s	CAPACITOR, CERAMIC 0.01MF/50V
C4084	1-163-021-91	s	CAPACITOR, CERAMIC 0.01MF/50V
C4085	1-163-021-91	s	CAPACITOR, CERAMIC 0.01MF/50V
C4086	1-126-398-11	s	CAPACITOR ELECT 4.7MF/35V(CHIP
C4088	1-128-235-11	s	CAPACITOR ERECT 0.47MF/50V
C4089	1-163-021-91	s	CAPACITOR, CERAMIC 0.01MF/50V
C4090	1-164-004-11	s	CAPACITOR,CERAMIC 0.1MF/25V
C4091	1-164-004-11	s	CAPACITOR,CERAMIC 0.1MF/25V
C4092	1-164-004-11	s	CAPACITOR,CERAMIC 0.1MF/25V
C4093	1-163-021-91	s	CAPACITOR, CERAMIC 0.01MF/50V
C4094	1-163-021-91	s	CAPACITOR, CERAMIC 0.01MF/50V
C4095	1-163-259-91	s	CAPACITOR,CHIP CERAMIC 220PF

(B BOARD)

Ref. No. or Q'ty	Part No.	SP	Description
C4096	1-126-398-11	s	CAPACITOR ELECT 4.7MF/35V(CHIP
C4097	1-163-145-00	s	CAPACITOR,CHIP CERAMIC 1500PF
C4098	1-164-004-11	s	CAPACITOR,CERAMIC 0.1MF/25V
C4099	1-126-396-11	s	CAPACITOR,ELECT 47MF/16V(CHIP)
C4100	1-126-392-11	s	CAPACITOR,CHIP ELECT100MF/6.3V
C4103	1-163-137-00	s	CAPACITOR,CHIP CERAMIC 680PF
C4104	1-164-004-11	s	CAPACITOR,CERAMIC 0.1MF/25V
C4105	1-163-263-11	s	CAPACITOR CERAMIC 330PF/50V
C4106	1-164-004-11	s	CAPACITOR,CERAMIC 0.1MF/25V
C4107	1-163-131-00	s	CAPACITOR,CHIP CERAMIC 390PF
C4108	1-163-131-00	s	CAPACITOR,CHIP CERAMIC 390PF
C4109	1-104-760-11	s	CAPACITOR CERAMIC 0.047MF/50V
C4110	1-164-004-11	s	CAPACITOR,CERAMIC 0.1MF/25V
C4111	1-104-760-11	s	CAPACITOR CERAMIC 0.047MF/50V
C4112	1-164-004-11	s	CAPACITOR,CERAMIC 0.1MF/25V
C4113	1-163-227-11	s	CAPACITOR CERAMIC 10PF/50V(CH)
C4114	1-163-137-00	s	CAPACITOR,CHIP CERAMIC 680PF
C6142	1-128-416-11	s	CAPACITOR ELECT 100MF/16V(105C
C6143	1-164-004-11	s	CAPACITOR,CERAMIC 0.1MF/25V
C6144	1-164-004-11	s	CAPACITOR,CERAMIC 0.1MF/25V
C6145	1-126-396-11	s	CAPACITOR,ELECT 47MF/16V(CHIP)
C6181	1-127-573-11	s	CAPACITOR,.CERAMIC 1MFB(2012)
C6182	1-127-573-11	s	CAPACITOR,.CERAMIC 1MFB(2012)
C6183	1-127-573-11	s	CAPACITOR,.CERAMIC 1MFB(2012)
C6184	1-127-573-11	s	CAPACITOR,.CERAMIC 1MFB(2012)
C6951	1-164-004-11	s	CAPACITOR,CERAMIC 0.1MF/25V
C6952	1-126-396-11	s	CAPACITOR,ELECT 47MF/16V(CHIP)
C6953	1-164-004-11	s	CAPACITOR,CERAMIC 0.1MF/25V
C6971	1-164-004-11	s	CAPACITOR,CERAMIC 0.1MF/25V
C6972	1-164-004-11	s	CAPACITOR,CERAMIC 0.1MF/25V
C6973	1-164-004-11	s	CAPACITOR,CERAMIC 0.1MF/25V
C6974	1-126-396-11	s	CAPACITOR,ELECT 47MF/16V(CHIP)
C6981	1-126-394-11	s	CAPACITOR,ELECT 10MF/16V(CHIP)
C6982	1-126-394-11	s	CAPACITOR,ELECT 10MF/16V(CHIP)
C6985	1-164-004-11	s	CAPACITOR,CERAMIC 0.1MF/25V
C6986	1-164-004-11	s	CAPACITOR,CERAMIC 0.1MF/25V
C6991	1-164-004-11	s	CAPACITOR,CERAMIC 0.1MF/25V
C6992	1-164-004-11	s	CAPACITOR,CERAMIC 0.1MF/25V
C6993	1-126-394-11	s	CAPACITOR,ELECT 10MF/16V(CHIP)
C8001	1-126-392-11	s	CAPACITOR,CHIP ELECT100MF/6.3V
C8002	1-164-004-11	s	CAPACITOR,CERAMIC 0.1MF/25V
C8003	1-164-004-11	s	CAPACITOR,CERAMIC 0.1MF/25V
C8004	1-164-004-11	s	CAPACITOR,CERAMIC 0.1MF/25V
C8005	1-164-004-11	s	CAPACITOR,CERAMIC 0.1MF/25V
C9001	1-164-004-11	s	CAPACITOR,CERAMIC 0.1MF/25V
C9002	1-126-396-11	s	CAPACITOR,ELECT 47MF/16V(CHIP)
C9003	1-164-004-11	s	CAPACITOR,CERAMIC 0.1MF/25V
C9004	1-126-396-11	s	CAPACITOR,ELECT 47MF/16V(CHIP)
C9005	1-126-394-11	s	CAPACITOR,ELECT 10MF/16V(CHIP)
C9006	1-126-394-11	s	CAPACITOR,ELECT 10MF/16V(CHIP)
C9007	1-164-004-11	s	CAPACITOR,CERAMIC 0.1MF/25V
C9008	1-126-396-11	s	CAPACITOR,ELECT 47MF/16V(CHIP)
C9101	1-164-004-11	s	CAPACITOR,CERAMIC 0.1MF/25V
C9102	1-126-396-11	s	CAPACITOR,ELECT 47MF/16V(CHIP)
C9103	1-164-004-11	s	CAPACITOR,CERAMIC 0.1MF/25V
C9104	1-126-396-11	s	CAPACITOR,ELECT 47MF/16V(CHIP)
C9105	1-126-394-11	s	CAPACITOR,ELECT 10MF/16V(CHIP)
C9106	1-126-394-11	s	CAPACITOR,ELECT 10MF/16V(CHIP)
C9107	1-164-004-11	s	CAPACITOR,CERAMIC 0.1MF/25V

(B BOARD)

Ref. No. or Q'ty	Part No.	SP	Description
C9108	1-126-396-11	s	CAPACITOR,ELECT 47MF/16V(CHIP)
C9109	1-163-021-91	s	CAPACITOR, CERAMIC 0.01MF/50V
C9110	1-163-021-91	s	CAPACITOR, CERAMIC 0.01MF/50V
C9111	1-164-004-11	s	CAPACITOR,CERAMIC 0.1MF/25V
C9112	1-163-021-91	s	CAPACITOR, CERAMIC 0.01MF/50V
C9201	1-163-005-11	s	CAP,CHIP CERAMIC 470PF
C9202	1-163-005-11	s	CAP,CHIP CERAMIC 470PF
C9203	1-163-005-11	s	CAP,CHIP CERAMIC 470PF
C9204	1-163-005-11	s	CAP,CHIP CERAMIC 470PF
C9205	1-163-005-11	s	CAP,CHIP CERAMIC 470PF
C9206	1-163-005-11	s	CAP,CHIP CERAMIC 470PF
CN103	1-815-257-11	o	HEADER, CONNECTOR
CN104	1-506-474-11	s	PIN,CONNECTOR 9P
CN105	1-506-468-11	s	PIN,CONNECTOR (3P)
CN106	1-564-877-31	o	PIN, CONNECTOR 15P
CN109	1-506-491-11	s	PIN,CONNECTOR 12P
CN110	1-506-487-11	s	PIN,CONNECTOR 8P
CN112	1-506-494-11	s	PIN,CONNECTOR (15P)
CN115	1-506-473-11	s	PIN,CONNECTOR 8P
CN118	1-506-468-11	s	PIN,CONNECTOR (3P)
CN801	1-766-809-11	o	PIN, CONNECTOR (PC BOARD) 3P
CN6102	1-770-418-11	o	CONNECTOR, BOARD TO BOARD 30P
CN6103	1-778-529-11	s	PIN, CONNECTOR (PC BOARD) 7P
CN6104	1-778-529-11	s	PIN, CONNECTOR (PC BOARD) 7P
CN6910	1-815-410-11	o	CONNECTOR SOCKET 44P
CN8001	1-506-492-11	o	PIN,CONNECTOR 13P
D1	8-719-073-01	s	DIODE MA111-(K8).S0
D100	8-719-914-43	s	DIODE DAN202K
D101	8-719-158-49	s	DIODE RD12SB2
D102	8-719-158-49	s	DIODE RD12SB2
D103	8-719-914-43	s	DIODE DAN202K
D201	8-719-073-01	s	DIODE MA111-(K8).S0
D504	8-719-158-15	s	DIODE RD5.6SB
D505	8-719-158-15	s	DIODE RD5.6SB
D506	8-719-158-15	s	DIODE RD5.6SB
D507	8-719-158-15	s	DIODE RD5.6SB
D508	8-719-158-15	s	DIODE RD5.6SB
D509	8-719-158-15	s	DIODE RD5.6SB
D510	8-719-073-01	s	DIODE MA111-(K8).S0
D511	8-719-073-01	s	DIODE MA111-(K8).S0
D512	8-719-073-01	s	DIODE MA111-(K8).S0
D513	8-719-073-01	s	DIODE MA111-(K8).S0
D514	8-719-073-01	s	DIODE MA111-(K8).S0
D515	8-719-073-01	s	DIODE MA111-(K8).S0
D516	8-719-073-01	s	DIODE MA111-(K8).S0
D700	8-719-158-15	s	DIODE RD5.6SB
D701	8-719-073-01	s	DIODE MA111-(K8).S0
D702	8-719-059-22	s	DIODE NSQ03A06-TE16L
D703	8-719-073-01	s	DIODE MA111-(K8).S0
D704	8-719-073-01	s	DIODE MA111-(K8).S0
D705	8-719-073-01	s	DIODE MA111-(K8).S0
D804	8-719-158-49	s	DIODE RD12SB2
D805	8-719-158-49	s	DIODE RD12SB2
D940	8-719-976-96	s	DIODE DTZ4.7B
D941	8-719-976-96	s	DIODE DTZ4.7B
D942	8-719-976-96	s	DIODE DTZ4.7B
D943	8-719-976-96	s	DIODE DTZ4.7B
D944	8-719-976-96	s	DIODE DTZ4.7B
D945	8-719-976-96	s	DIODE DTZ4.7B
D946	8-719-976-96	s	DIODE DTZ4.7B
D947	8-719-976-96	s	DIODE DTZ4.7B

(B BOARD)

Ref. No. or Q'ty	Part No.	SP	Description
D948	8-719-073-01	s	DIODE MA111-(K8).S0
D1000	8-719-800-76	s	DIODE 1SS226
D1001	8-719-800-76	s	DIODE 1SS226
D1002	8-719-800-76	s	DIODE 1SS226
D1003	8-719-073-01	s	DIODE MA111-(K8).S0
D1004	8-719-073-01	s	DIODE MA111-(K8).S0
D1005	8-719-988-61	s	DIODE 1SS355TE-17
D1006	8-719-073-01	s	DIODE MA111-(K8).S0
D1007	8-719-422-12	s	DIODE MA8039
D4000	8-719-073-01	s	DIODE MA111-(K8).S0
D4001	8-719-073-01	s	DIODE MA111-(K8).S0
D4002	8-719-914-43	s	DIODE DAN202K
D4003	8-719-914-43	s	DIODE DAN202K
D4004	8-719-073-01	s	DIODE MA111-(K8).S0
D4005	8-719-914-43	s	DIODE DAN202K
D4006	8-719-031-68	s	DIODE HVU359-TRU(VARI-CAP)
D4007	8-719-031-68	s	DIODE HVU359-TRU(VARI-CAP)
D4008	8-719-031-68	s	DIODE HVU359-TRU(VARI-CAP)
D6181	8-719-073-01	s	DIODE MA111-(K8).S0
D6182	8-719-073-01	s	DIODE MA111-(K8).S0
D6183	8-719-073-01	s	DIODE MA111-(K8).S0
D6184	8-719-158-49	s	DIODE RD12SB2
D8001	8-719-158-15	s	DIODE RD5.6SB
D8002	8-719-800-76	s	DIODE 1SS226
D8003	8-719-800-76	s	DIODE 1SS226
D8004	8-719-800-76	s	DIODE 1SS226
D9001	8-719-800-76	s	DIODE 1SS226
D9004	8-719-800-76	s	DIODE 1SS226
D9005	8-719-402-16	s	DIODE MA3100-TX
D9006	8-719-402-16	s	DIODE MA3100-TX
D9007	8-719-800-76	s	DIODE 1SS226
D9008	8-719-800-76	s	DIODE 1SS226
D9009	8-719-800-76	s	DIODE 1SS226
D9010	8-719-977-28	s	DIODE DTZ10B
D9011	8-719-977-28	s	DIODE DTZ10B
D9101	8-719-800-76	s	DIODE 1SS226
D9104	8-719-800-76	s	DIODE 1SS226
D9105	8-719-402-16	s	DIODE MA3100-TX
D9106	8-719-402-16	s	DIODE MA3100-TX
D9107	8-719-800-76	s	DIODE 1SS226
D9108	8-719-800-76	s	DIODE 1SS226
D9109	8-719-800-76	s	DIODE 1SS226
D9110	8-719-977-28	s	DIODE DTZ10B
D9111	8-719-977-28	s	DIODE DTZ10B
D9201	8-719-402-16	s	DIODE MA3100-TX
D9202	8-719-402-16	s	DIODE MA3100-TX
D9203	8-719-402-16	s	DIODE MA3100-TX
D9204	8-719-402-16	s	DIODE MA3100-TX
D9301	8-719-025-47	s	DIODE 02CZ12-TE85L
D9302	8-719-025-47	s	DIODE 02CZ12-TE85L
D9303	8-719-025-47	s	DIODE 02CZ12-TE85L
D9304	8-719-025-47	s	DIODE 02CZ12-TE85L
D9305	8-719-025-47	s	DIODE 02CZ12-TE85L
D9306	8-719-025-47	s	DIODE 02CZ12-TE85L
D9307	8-719-025-47	s	DIODE 02CZ12-TE85L
D9308	8-719-025-47	s	DIODE 02CZ12-TE85L
D9309	8-719-158-15	s	DIODE RD5.6SB
D9310	8-719-158-15	s	DIODE RD5.6SB

(B BOARD)

Ref. No. or Q'ty	Part No.	SP	Description
FB101	1-414-234-11	s	INDUCTOR,FERRITE BEAD
FB200	1-414-234-11	s	INDUCTOR,FERRITE BEAD
FB201	1-414-234-11	s	INDUCTOR,FERRITE BEAD
FB202	1-414-234-11	s	INDUCTOR,FERRITE BEAD
FB203	1-414-234-11	s	INDUCTOR,FERRITE BEAD
FB204	1-414-234-11	s	INDUCTOR,FERRITE BEAD
FB205	1-414-234-11	s	INDUCTOR,FERRITE BEAD
FB700	1-410-396-41	s	FERRITE BEAD INDUCTOR (0.45UH)
FB701	1-414-230-11	s	INDUCTOR, FERRITE BEAD
FL1000	1-414-234-11	s	INDUCTOR,FERRITE BEAD
FL1001	1-414-234-11	s	INDUCTOR,FERRITE BEAD
FL1002	1-543-775-11	s	BEAD, FERRITE
FL1003	1-543-775-11	s	BEAD, FERRITE
FL1004	1-239-847-11	s	FILTER, LOW PASS
FL1005	1-233-505-21	s	FILTER, LOW PASS
FL1006	1-233-504-21	s	FILTER, LOW PASS
FL1007	1-233-504-21	s	FILTER, LOW PASS
FL4000	1-233-736-21	s	FILTER, EMI
FL4001	1-233-736-21	s	FILTER, EMI
FL4002	1-233-736-21	s	FILTER, EMI
FL4003	1-233-434-11	s	FILTER, LOW PASS
FL4004	1-233-736-21	s	FILTER, EMI
FL4005	1-233-736-21	s	FILTER, EMI
FL4006	1-233-434-11	s	FILTER, LOW PASS
FL4007	1-233-505-21	s	FILTER, LOW PASS
FL4008	1-233-504-21	s	FILTER, LOW PASS
FL4009	1-233-504-21	s	FILTER, LOW PASS
IC1	8-759-460-72	s	IC BA033FP
IC2	8-759-581-89	s	IC LM317SX
IC3	8-759-460-72	s	IC BA033FP
IC4	8-759-539-90	s	IC LM2940SX-5.0
IC6	8-759-460-79	s	IC BA09FP-E2
IC7	8-759-460-72	s	IC BA033FP
IC100	8-759-595-97	s	IC SN74LV4053ANSR
IC101	8-759-646-02	s	IC M52347FP-TE
IC102	8-759-475-21	s	IC TC74LCX244F(EL)
IC103	8-759-442-20	s	IC 24LC21A/SN
IC200	8-759-645-12	s	IC AD9884AKS-140
IC202	8-759-481-73	s	IC SN74LVC125APW (E20)
IC204	8-759-362-35	s	IC ICS9161A-01CW16T
IC205	8-759-575-71	s	IC M24C04-WMN6T
IC206	8-759-669-11	o	IC MBM29LV400TC-70PFTN-SV9695
IC207	8-759-646-32	s	IC PW164-20W
IC208	8-759-712-67	o	IC EP1K50TC144-3
IC209	8-759-475-21	s	IC TC74LCX244F(EL)
IC210	8-759-491-51	s	IC TC74VHCT245AFT(EL)
IC211	8-759-491-51	s	IC TC74VHCT245AFT(EL)
IC212	8-759-491-51	s	IC TC74VHCT245AFT(EL)
IC213	8-759-491-51	s	IC TC74VHCT245AFT(EL)
IC214	8-759-599-99	s	IC MB90096PF-G-182
IC215	8-759-491-51	s	IC TC74VHCT245AFT(EL)
IC216	8-759-829-32	s	IC EPC1LC20-42B1-V100
IC218	8-759-646-15	s	IC ST49C101ACF8-05-TR
IC219	8-759-058-62	s	IC TC7S08FU-TE85R
IC220	8-759-239-34	s	IC TC74HC4538AF
IC221	8-759-439-67	s	IC TC7W126FU(TE12R)
IC222	8-759-491-32	s	IC TC74VHCT04AF(EL)

(B BOARD)

Ref. No. or Q'ty	Part No.	SP	Description
IC223	8-759-058-58	s	IC TC7S04FU-TE85R
IC500	8-759-232-46	s	IC TC74HC126AF
IC501	8-759-635-27	s	IC M62352GP
IC502	8-759-475-21	s	IC TC74LCX244F(EL)
IC503	8-759-252-59	s	IC MAX202CSE
IC504	8-759-560-17	s	IC RS5C348A-E2
IC505	8-759-232-46	s	IC TC74HC126AF
IC506	8-759-232-44	s	IC TC74HC125AF
IC507	8-759-233-73	s	IC TC74HCT244AF
IC508	8-759-186-30	s	IC TC74VHC14F
IC509	8-759-648-10	s	IC HD64F2633TE
IC510	8-759-058-62	s	IC TC7S08FU-TE85R
IC511	8-759-684-72	o	IC M24C64-WMN6T(A)
IC512	8-759-582-91	s	IC S-80842ANNP-ED6-T2
IC513	8-759-582-91	s	IC S-80842ANNP-ED6-T2
IC703	8-759-700-07	s	IC NJM2903M
IC831	8-759-581-89	s	IC LM317SX
IC1000	8-752-053-21	s	IC CXA1211M
IC1001	8-752-053-21	s	IC CXA1211M
IC1002	8-759-595-97	s	IC SN74LV4053ANSR
IC1003	8-759-595-97	s	IC SN74LV4053ANSR
IC1004	8-759-082-61	s	IC TC4W53FU
IC1005	8-752-053-21	s	IC CXA1211M
IC1006	8-759-987-27	s	IC LM1881M
IC1007	8-759-568-27	s	IC MSM514265C-60JSDR1
IC1008	8-759-460-72	s	IC BA033FP
IC1009	8-759-460-72	s	IC BA033FP
IC1010	8-759-031-84	s	IC SC7S04F
IC1011	8-759-594-44	s	IC UPD64082GF-3BA
IC1012	8-759-031-84	s	IC SC7S04F
IC1013	8-759-645-68	o	IC ISPLSI2023E-110LT48
IC1027	8-759-970-89	s	IC BA10358F
IC1028	8-759-970-89	s	IC BA10358F
IC1029	8-759-970-89	s	IC BA10358F
IC1030	8-752-067-05	s	IC CXA1739S
IC1031	8-759-595-97	s	IC SN74LV4053ANSR
IC1032	8-759-328-12	s	IC Z8622812PSC
IC1033	8-759-539-90	s	IC LM2940SX-5.0
IC1034	8-759-460-81	s	IC BA12FP-E2
IC1035	8-752-082-49	s	IC CXA2119M
IC1036	8-749-015-18	s	IC PQ07VZ012P
IC1037	8-759-669-78	s	IC TLC2933IPWR-12
IC1038	8-759-431-14	s	IC PQ3TZ53U
IC1039	8-759-676-70	s	IC MSM56V16160F-10TS-K
IC1040	8-752-398-47	s	IC CXD2090Q
IC1041	8-759-669-75	s	IC TLC2932IPWR
IC1042	8-759-447-90	s	IC TLC5733AIPM
IC1043	8-759-528-48	s	IC NJU7032M-TE2
IC1044	8-759-082-61	s	IC TC4W53FU
IC4000	8-759-430-79	s	IC TDA8395T/N3
IC4001	8-752-070-58	s	IC CXA1860Q(T4)
IC4003	8-752-352-09	s	IC CXD2300Q
IC4004	8-752-369-15	s	IC CXD2030R
IC4005	8-759-595-97	s	IC SN74LV4053ANSR
IC4006	8-752-369-84	s	IC CXD2309Q (T6)
IC4007	8-759-296-53	s	IC UPC1862GS-E2
IC4008	8-759-239-55	s	IC TC74HC123AF
IC4009	8-759-239-55	s	IC TC74HC123AF
IC4010	8-759-235-14	s	IC TC74HC04AF (TP2)
IC4011	8-759-239-55	s	IC TC74HC123AF

(B BOARD)

Ref. No. or Q'ty	Part No.	SP	Description
IC4012	8-759-232-65	s	IC TC74HC157AF
IC4013	8-759-442-20	s	IC 24LC21A/SN
IC6105	8-759-460-81	s	IC BA12FP-E2
IC6903	8-759-446-66	s	IC MM1113XFBE
IC6904	8-759-446-66	s	IC MM1113XFBE
IC6905	8-759-360-07	s	IC BA7657F-E2
IC6906	8-759-011-64	s	IC MC74HC4052F
IC6907	8-759-360-07	s	IC BA7657F-E2
IC6908	8-759-439-67	s	IC TC7W126FU(TE12R)
IC6909	8-759-232-44	s	IC TC74HC125AF
IC8001	8-759-439-67	s	IC TC7W126FU(TE12R)
J9001	1-774-361-11	s	CONNECTOR, D SUB 15P (INPUT1 IN)
J9002	1-774-361-11	s	CONNECTOR, D SUB 15P (INPUT2 IN)
J9101	1-566-822-21	s	JACK (INPUT1 AUDIO IN)
J9102	1-566-822-21	s	JACK (INPUT2 AUDIO IN)
J9103	1-566-822-21	s	JACK (AUDIO OUT)
J9201	1-565-269-11	s	SOCKET,CONNECTOR 9P (REMOTE)
JR6102	1-216-295-00	s	CONDUCTOR, CHIP (2012)
L200	1-414-752-11	s	INDUCTOR 2.2UH
L700	1-410-482-31	s	MICRO INDUCTOR 100UH
L701	1-406-666-21	s	COIL, CHOKE 150UH
L702	1-406-666-21	s	COIL, CHOKE 150UH
L704	1-410-671-31	s	MICRO INDUCTOR 47UH
L801	1-414-404-11	s	INDUCTOR (SMD) 100UH
L1001	1-410-200-31	s	CHIP INDUCTOR
L1002	1-414-042-21	s	INDUCTOR,LEAD LESS
L1003	1-410-210-21	s	CHIP INDUCTOR
L1004	1-414-754-11	s	INDUCTOR 10.0UH
L1005	1-414-754-11	s	INDUCTOR 10.0UH
L1006	1-414-757-11	s	INDUCTOR 100.0UH
L1007	1-412-052-21	s	INDUCTOR, SMALL TYPE 1.00UH
L1008	1-414-757-11	s	INDUCTOR 100.0UH
L1009	1-414-754-11	s	INDUCTOR 10.0UH
L1010	1-414-754-11	s	INDUCTOR 10.0UH
L1011	1-410-663-31	s	MICRO INDUCTOR 10UH
L1012	1-414-754-11	s	INDUCTOR 10.0UH
L1013	1-414-757-11	s	INDUCTOR 100.0UH
L1014	1-414-757-11	s	INDUCTOR 100.0UH
L1015	1-414-757-11	s	INDUCTOR 100.0UH
L1016	1-414-754-11	s	INDUCTOR 10.0UH
L1017	1-414-754-11	s	INDUCTOR 10.0UH
L1018	1-414-754-11	s	INDUCTOR 10.0UH
L4000	1-408-595-31	s	MICRO INDUCTOR 2.2UH
L4001	1-408-591-11	s	MICRO INDUCTOR 1UH
L4002	1-410-373-31	s	MICRO INDUCTOR 2.2UH
L4003	1-408-595-31	s	MICRO INDUCTOR 2.2UH
L4004	1-410-373-31	s	MICRO INDUCTOR 2.2UH
L4005	1-408-591-11	s	MICRO INDUCTOR 1UH
L4006	1-414-248-11	s	INDUCTOR,CHIP 2.2UH
L4007	1-414-248-11	s	INDUCTOR,CHIP 2.2UH
L4008	1-408-591-11	s	MICRO INDUCTOR 1UH
L4009	1-410-193-51	s	CHIP INDUCTOR 1.2UH
L4010	1-410-193-51	s	CHIP INDUCTOR 1.2UH
L4011	1-410-193-51	s	CHIP INDUCTOR 1.2UH
L4012	1-410-193-51	s	CHIP INDUCTOR 1.2UH
L4013	1-410-193-51	s	CHIP INDUCTOR 1.2UH
L4014	1-410-193-51	s	CHIP INDUCTOR 1.2UH
L4017	1-410-193-51	s	CHIP INDUCTOR 1.2UH

(B BOARD)

Ref. No. or Q'ty	Part No.	SP	Description
L4018	1-414-248-11	s	INDUCTOR,CHIP 2.2UH
L4019	1-416-668-11	s	COIL, CHOKE 10UH
Q100	8-729-120-28	s	TRANSISTOR 2SC1623-L5L6
Q101	8-729-120-28	s	TRANSISTOR 2SC1623-L5L6
Q102	8-729-026-49	s	TRANSISTOR 2SA1037AK-T146-R
Q103	8-729-120-28	s	TRANSISTOR 2SC1623-L5L6
Q104	8-729-120-28	s	TRANSISTOR 2SC1623-L5L6
Q200	8-729-026-49	s	TRANSISTOR 2SA1037AK-T146-R
Q203	8-729-027-38	s	TRANSISTOR DTA144EKA-T146
Q502	8-729-120-28	s	TRANSISTOR 2SC1623-L5L6
Q503	8-729-101-07	s	TRANSISTOR 2SB798
Q506	8-729-027-38	s	TRANSISTOR DTA144EKA-T146
Q507	8-729-900-53	s	TRANSISTOR DTC114EK
Q700	8-729-026-49	s	TRANSISTOR 2SA1037AK-T146-R
Q701	8-729-120-28	s	TRANSISTOR 2SC1623-L5L6
Q702	8-729-041-37	s	TRANSISTOR 2SJ377(TE16L)
Q1000	8-729-026-49	s	TRANSISTOR 2SA1037AK-T146-R
Q1001	8-729-026-49	s	TRANSISTOR 2SA1037AK-T146-R
Q1002	8-729-026-49	s	TRANSISTOR 2SA1037AK-T146-R
Q1003	8-729-026-49	s	TRANSISTOR 2SA1037AK-T146-R
Q1004	8-729-120-28	s	TRANSISTOR 2SC1623-L5L6
Q1005	8-729-120-28	s	TRANSISTOR 2SC1623-L5L6
Q1006	8-729-120-28	s	TRANSISTOR 2SC1623-L5L6
Q1007	8-729-026-49	s	TRANSISTOR 2SA1037AK-T146-R
Q1008	8-729-026-49	s	TRANSISTOR 2SA1037AK-T146-R
Q1009	8-729-026-49	s	TRANSISTOR 2SA1037AK-T146-R
Q1010	8-729-120-28	s	TRANSISTOR 2SC1623-L5L6
Q1011	8-729-120-28	s	TRANSISTOR 2SC1623-L5L6
Q1012	8-729-120-28	s	TRANSISTOR 2SC1623-L5L6
Q1013	1-801-806-11	s	TRANSISTOR DTC144EKA
Q1014	8-729-026-49	s	TRANSISTOR 2SA1037AK-T146-R
Q1015	1-801-806-11	s	TRANSISTOR DTC144EKA
Q1016	8-729-026-49	s	TRANSISTOR 2SA1037AK-T146-R
Q1017	1-801-806-11	s	TRANSISTOR DTC144EKA
Q1018	8-729-120-28	s	TRANSISTOR 2SC1623-L5L6
Q1019	8-729-120-28	s	TRANSISTOR 2SC1623-L5L6
Q1020	8-729-120-28	s	TRANSISTOR 2SC1623-L5L6
Q1021	8-729-120-28	s	TRANSISTOR 2SC1623-L5L6
Q1022	8-729-120-28	s	TRANSISTOR 2SC1623-L5L6
Q1023	8-729-120-28	s	TRANSISTOR 2SC1623-L5L6
Q1024	8-729-026-49	s	TRANSISTOR 2SA1037AK-T146-R
Q1025	8-729-026-49	s	TRANSISTOR 2SA1037AK-T146-R
Q1026	8-729-120-28	s	TRANSISTOR 2SC1623-L5L6
Q1027	8-729-120-28	s	TRANSISTOR 2SC1623-L5L6
Q1028	8-729-026-49	s	TRANSISTOR 2SA1037AK-T146-R
Q1029	8-729-120-28	s	TRANSISTOR 2SC1623-L5L6
Q1030	8-729-026-49	s	TRANSISTOR 2SA1037AK-T146-R
Q1031	8-729-120-28	s	TRANSISTOR 2SC1623-L5L6
Q1032	8-729-120-28	s	TRANSISTOR 2SC1623-L5L6
Q1033	8-729-026-49	s	TRANSISTOR 2SA1037AK-T146-R
Q1034	8-729-120-28	s	TRANSISTOR 2SC1623-L5L6
Q1035	1-801-806-11	s	TRANSISTOR DTC144EKA
Q1036	1-801-806-11	s	TRANSISTOR DTC144EKA
Q1037	1-801-806-11	s	TRANSISTOR DTC144EKA
Q1038	8-729-120-28	s	TRANSISTOR 2SC1623-L5L6
Q1039	8-729-120-28	s	TRANSISTOR 2SC1623-L5L6
Q1040	8-729-120-28	s	TRANSISTOR 2SC1623-L5L6

(B BOARD)

Ref. No. or Q'ty	Part No.	SP	Description
Q1041	8-729-120-28	s	TRANSISTOR 2SC1623-L5L6
Q1042	8-729-026-49	s	TRANSISTOR 2SA1037AK-T146-R
Q1043	8-729-120-28	s	TRANSISTOR 2SC1623-L5L6
Q1044	8-729-120-28	s	TRANSISTOR 2SC1623-L5L6
Q1045	8-729-120-28	s	TRANSISTOR 2SC1623-L5L6
Q1046	8-729-120-28	s	TRANSISTOR 2SC1623-L5L6
Q1047	8-729-216-22	s	TRANSISTOR 2SA1162-G
Q1048	8-729-120-28	s	TRANSISTOR 2SC1623-L5L6
Q1049	8-729-216-22	s	TRANSISTOR 2SA1162-G
Q1050	8-729-216-22	s	TRANSISTOR 2SA1162-G
Q1051	8-729-120-28	s	TRANSISTOR 2SC1623-L5L6
Q1052	8-729-120-28	s	TRANSISTOR 2SC1623-L5L6
Q1053	8-729-120-28	s	TRANSISTOR 2SC1623-L5L6
Q1054	8-729-216-22	s	TRANSISTOR 2SA1162-G
Q1055	8-729-216-22	s	TRANSISTOR 2SA1162-G
Q1056	8-729-216-22	s	TRANSISTOR 2SA1162-G
Q1057	8-729-026-49	s	TRANSISTOR 2SA1037AK-T146-R
Q1058	8-729-900-53	s	TRANSISTOR DTC114EK
Q1059	8-729-120-28	s	TRANSISTOR 2SC1623-L5L6
Q1060	8-729-120-28	s	TRANSISTOR 2SC1623-L5L6
Q1061	8-729-120-28	s	TRANSISTOR 2SC1623-L5L6
Q1062	8-729-120-28	s	TRANSISTOR 2SC1623-L5L6
Q1063	8-729-120-28	s	TRANSISTOR 2SC1623-L5L6
Q1064	8-729-120-28	s	TRANSISTOR 2SC1623-L5L6
Q1065	8-729-026-49	s	TRANSISTOR 2SA1037AK-T146-R
Q1066	8-729-216-22	s	TRANSISTOR 2SA1162-G
Q1067	8-729-027-38	s	TRANSISTOR DTA144EKA-T146
Q4000	8-729-216-22	s	TRANSISTOR 2SA1162-G
Q4001	8-729-120-28	s	TRANSISTOR 2SC1623-L5L6
Q4002	8-729-120-28	s	TRANSISTOR 2SC1623-L5L6
Q4003	8-729-900-53	s	TRANSISTOR DTC114EK
Q4004	8-729-900-53	s	TRANSISTOR DTC114EK
Q4005	8-729-027-23	s	TRANSISTOR DTA114EKA-T146
Q4006	8-729-900-53	s	TRANSISTOR DTC114EK
Q4007	8-729-216-22	s	TRANSISTOR 2SA1162-G
Q4008	8-729-216-22	s	TRANSISTOR 2SA1162-G
Q4009	8-729-120-28	s	TRANSISTOR 2SC1623-L5L6
Q4010	8-729-120-28	s	TRANSISTOR 2SC1623-L5L6
Q4011	8-729-120-28	s	TRANSISTOR 2SC1623-L5L6
Q4012	8-729-120-28	s	TRANSISTOR 2SC1623-L5L6
Q4013	8-729-027-23	s	TRANSISTOR DTA114EKA-T146
Q4014	8-729-120-28	s	TRANSISTOR 2SC1623-L5L6
Q4015	8-729-120-28	s	TRANSISTOR 2SC1623-L5L6
Q4016	8-729-120-28	s	TRANSISTOR 2SC1623-L5L6
Q4017	8-729-120-28	s	TRANSISTOR 2SC1623-L5L6
Q4018	8-729-216-22	s	TRANSISTOR 2SA1162-G
Q4019	8-729-900-53	s	TRANSISTOR DTC114EK
Q4020	8-729-216-22	s	TRANSISTOR 2SA1162-G
Q4021	8-729-120-28	s	TRANSISTOR 2SC1623-L5L6
Q4022	8-729-027-23	s	TRANSISTOR DTA114EKA-T146
Q4023	8-729-900-53	s	TRANSISTOR DTC114EK
Q4024	8-729-216-22	s	TRANSISTOR 2SA1162-G
Q4025	1-801-806-11	s	TRANSISTOR DTC144EKA
Q4026	8-729-120-28	s	TRANSISTOR 2SC1623-L5L6
Q4027	8-729-026-49	s	TRANSISTOR 2SA1037AK-T146-R
Q4028	8-729-120-28	s	TRANSISTOR 2SC1623-L5L6
Q4029	8-729-120-28	s	TRANSISTOR 2SC1623-L5L6
Q4030	8-729-216-22	s	TRANSISTOR 2SA1162-G
Q4031	8-729-216-22	s	TRANSISTOR 2SA1162-G
Q4032	8-729-216-22	s	TRANSISTOR 2SA1162-G

(B BOARD)

Ref. No. or Q'ty	Part No.	SP	Description
Q4033	8-729-216-22	s	TRANSISTOR 2SA1162-G
Q4034	8-729-216-22	s	TRANSISTOR 2SA1162-G
Q4035	8-729-216-22	s	TRANSISTOR 2SA1162-G
Q4036	8-729-027-38	s	TRANSISTOR DTA144EKA-T146
Q4037	8-729-027-38	s	TRANSISTOR DTA144EKA-T146
Q4038	1-801-806-11	s	TRANSISTOR DTC144EKA
Q4039	1-801-806-11	s	TRANSISTOR DTC144EKA
Q6181	8-729-120-28	s	TRANSISTOR 2SC1623-L5L6
Q6182	1-801-806-11	s	TRANSISTOR DTC144EKA
Q6193	8-729-120-28	s	TRANSISTOR 2SC1623-L5L6
Q6901	8-729-027-38	s	TRANSISTOR DTA144EKA-T146
Q6902	8-729-027-38	s	TRANSISTOR DTA144EKA-T146
Q6903	8-729-027-38	s	TRANSISTOR DTA144EKA-T146
Q6904	1-801-806-11	s	TRANSISTOR DTC144EKA
Q6905	8-729-203-31	s	TRANSISTOR 2SJ106N-GR
Q6906	8-729-203-31	s	TRANSISTOR 2SJ106N-GR
Q6907	1-801-806-11	s	TRANSISTOR DTC144EKA
Q6908	1-801-806-11	s	TRANSISTOR DTC144EKA
Q6909	8-729-120-28	s	TRANSISTOR 2SC1623-L5L6
Q6910	8-729-120-28	s	TRANSISTOR 2SC1623-L5L6
Q6911	8-729-026-49	s	TRANSISTOR 2SA1037AK-T146-R
Q6912	8-729-027-38	s	TRANSISTOR DTA144EKA-T146
Q8001	1-801-806-11	s	TRANSISTOR DTC144EKA
Q8002	1-801-806-11	s	TRANSISTOR DTC144EKA
R1	1-216-341-11	s	RESISTOR,METAL FILM 0.22 1W
R3	1-216-644-11	s	RESISTOR,CHIP 510 1/10W (2012)
R4	1-216-643-11	s	RESISTOR,CHIP 470 1/10W (2012)
R5	1-215-880-00	s	RESISTOR,METAL FILM 10/2W
R100	1-216-041-00	s	RESISTOR, CHIP 470 1/10W(2012)
R101	1-216-041-00	s	RESISTOR, CHIP 470 1/10W(2012)
R103	1-216-681-11	s	RESISTOR,CHIP 18K 1/10W (2012)
R105	1-216-681-11	s	RESISTOR,CHIP 18K 1/10W (2012)
R106	1-218-756-11	s	RESISTOR,CHIP 150K 1/10W(2012)
R107	1-216-697-91	s	RESISTOR,CHIP 82K 1/10W
R108	1-216-666-11	s	RESISTOR,CHIP 4.3K 1/10W(2012)
R109	1-216-659-11	s	RESISTOR,CHIP 2.2K 1/10W(2012)
R110	1-216-659-11	s	RESISTOR,CHIP 2.2K 1/10W(2012)
R111	1-216-659-11	s	RESISTOR,CHIP 2.2K 1/10W(2012)
R112	1-216-017-91	s	RESISTOR, CHIP 47 1/10W(2012)
R114	1-216-017-91	s	RESISTOR, CHIP 47 1/10W(2012)
R115	1-216-017-91	s	RESISTOR, CHIP 47 1/10W(2012)
R116	1-216-089-00	s	RESISTOR CHIP 47K 1/10W(2012)
R117	1-216-017-91	s	RESISTOR, CHIP 47 1/10W(2012)
R204	1-216-001-00	s	RESISTOR, CHIP 10 1/10W(2012)
R205	1-216-001-00	s	RESISTOR, CHIP 10 1/10W(2012)
R206	1-216-061-00	s	RESISTOR CHIP 3.3K 1/10W(2012)
R207	1-216-295-00	s	CONDUCTOR, CHIP (2012)
R208	1-216-061-00	s	RESISTOR CHIP 3.3K 1/10W(2012)
R211	1-216-073-00	s	RESISTOR,CHIP 10K 1/10W(2012)
R212	1-216-653-11	s	RESISTOR,CHIP 1.2K 1/10W(2012)
R213	1-216-073-00	s	RESISTOR,CHIP 10K 1/10W(2012)
R214	1-216-009-00	s	RESISTOR,CHIP 22 1/10W (2012)
R216	1-216-009-00	s	RESISTOR,CHIP 22 1/10W (2012)
R217	1-216-017-91	s	RESISTOR, CHIP 47 1/10W(2012)
R218	1-216-017-91	s	RESISTOR, CHIP 47 1/10W(2012)
R219	1-216-295-00	s	CONDUCTOR, CHIP (2012)
R220	1-216-017-91	s	RESISTOR, CHIP 47 1/10W(2012)
R221	1-216-295-00	s	CONDUCTOR, CHIP (2012)
R222	1-216-017-91	s	RESISTOR, CHIP 47 1/10W(2012)

(B BOARD)

Ref. No. or Q'ty	Part No.	SP	Description
R223	1-216-017-91	s	RESISTOR, CHIP 47 1/10W(2012)
R224	1-216-017-91	s	RESISTOR, CHIP 47 1/10W(2012)
R225	1-216-017-91	s	RESISTOR, CHIP 47 1/10W(2012)
R226	1-216-057-00	s	RESISTOR CHIP 2.2K 1/10W(2012)
R230	1-216-067-00	s	RESISTOR,CHIP 5.6K 1/10W(2012)
R231	1-216-073-00	s	RESISTOR,CHIP 10K 1/10W(2012)
R232	1-216-073-00	s	RESISTOR,CHIP 10K 1/10W(2012)
R233	1-216-061-00	s	RESISTOR CHIP 3.3K 1/10W(2012)
R234	1-216-061-00	s	RESISTOR CHIP 3.3K 1/10W(2012)
R235	1-216-049-11	s	RESISTOR, CHIP 1K 1/10W(2012)
R236	1-216-049-11	s	RESISTOR, CHIP 1K 1/10W(2012)
R238	1-216-295-00	s	CONDUCTOR, CHIP (2012)
R239	1-216-295-00	s	CONDUCTOR, CHIP (2012)
R240	1-216-295-00	s	CONDUCTOR, CHIP (2012)
R244	1-216-295-00	s	CONDUCTOR, CHIP (2012)
R245	1-216-295-00	s	CONDUCTOR, CHIP (2012)
R246	1-216-295-00	s	CONDUCTOR, CHIP (2012)
R248	1-216-295-00	s	CONDUCTOR, CHIP (2012)
R249	1-216-295-00	s	CONDUCTOR, CHIP (2012)
R250	1-216-295-00	s	CONDUCTOR, CHIP (2012)
R251	1-216-295-00	s	CONDUCTOR, CHIP (2012)
R252	1-216-295-00	s	CONDUCTOR, CHIP (2012)
R253	1-216-295-00	s	CONDUCTOR, CHIP (2012)
R254	1-216-295-00	s	CONDUCTOR, CHIP (2012)
R255	1-216-295-00	s	CONDUCTOR, CHIP (2012)
R256	1-216-295-00	s	CONDUCTOR, CHIP (2012)
R259	1-216-073-00	s	RESISTOR,CHIP 10K 1/10W(2012)
R262	1-216-073-00	s	RESISTOR,CHIP 10K 1/10W(2012)
R263	1-216-681-11	s	RESISTOR,CHIP 18K 1/10W (2012)
R269	1-216-295-00	s	CONDUCTOR, CHIP (2012)
R270	1-216-295-00	s	CONDUCTOR, CHIP (2012)
R271	1-216-295-00	s	CONDUCTOR, CHIP (2012)
R272	1-216-295-00	s	CONDUCTOR, CHIP (2012)
R274	1-216-295-00	s	CONDUCTOR, CHIP (2012)
R275	1-216-295-00	s	CONDUCTOR, CHIP (2012)
R276	1-216-295-00	s	CONDUCTOR, CHIP (2012)
R278	1-216-295-00	s	CONDUCTOR, CHIP (2012)
R281	1-216-295-00	s	CONDUCTOR, CHIP (2012)
R282	1-216-624-11	s	RESISTOR,CHIP 75 1/10W(2012)
R283	1-216-631-11	s	RESISTOR,CHIP 150 1/10W (2012)
R284	1-216-624-11	s	RESISTOR,CHIP 75 1/10W(2012)
R286	1-216-089-00	s	RESISTOR CHIP 47K 1/10W(2012)
R287	1-216-017-91	s	RESISTOR, CHIP 47 1/10W(2012)
R288	1-216-017-91	s	RESISTOR, CHIP 47 1/10W(2012)
R289	1-216-017-91	s	RESISTOR, CHIP 47 1/10W(2012)
R290	1-216-651-11	s	RESISTOR,CHIP 1K 1/10W(2012)
R291	1-216-025-00	s	RESISTOR,CHIP 100 1/10W(2012)
R292	1-216-057-00	s	RESISTOR CHIP 2.2K 1/10W(2012)
R293	1-216-017-91	s	RESISTOR, CHIP 47 1/10W(2012)
R294	1-216-673-11	s	RESISTOR,CHIP 8.2K 1/10W(2012)
R295	1-216-675-11	s	RESISTOR,CHIP 10K 1/10W(2012)
R296	1-216-697-91	s	RESISTOR,CHIP 82K 1/10W
R297	1-216-049-11	s	RESISTOR, CHIP 1K 1/10W(2012)
R437	1-216-037-00	s	RESISTOR,CHIP 330 1/10W(2012)
R438	1-216-037-00	s	RESISTOR,CHIP 330 1/10W(2012)
R439	1-216-037-00	s	RESISTOR,CHIP 330 1/10W(2012)
R440	1-216-029-00	s	RESISTOR,CHIP 150 1/10W(2012)
R441	1-216-029-00	s	RESISTOR,CHIP 150 1/10W(2012)
R442	1-216-029-00	s	RESISTOR,CHIP 150 1/10W(2012)
R443	1-216-025-00	s	RESISTOR,CHIP 100 1/10W(2012)

(B BOARD)

Ref. No. or Q'ty	Part No.	SP	Description
R444	1-216-025-00	s	RESISTOR,CHIP 100 1/10W(2012)
R445	1-216-025-00	s	RESISTOR,CHIP 100 1/10W(2012)
R446	1-216-643-11	s	RESISTOR,CHIP 470 1/10W (2012)
R447	1-216-651-11	s	RESISTOR,CHIP 1K 1/10W(2012)
R448	1-216-045-00	s	RESISTOR,CHIP 680 1/10W(2012)
R449	1-216-663-11	s	RESISTOR,CHIP 3.3K 1/10W(2012)
R450	1-216-691-11	s	RESISTOR,CHIP 47K 1/10W(2012)
R451	1-216-695-11	s	RESISTOR,CHIP 68K 1/10W(2012)
R452	1-216-697-91	s	RESISTOR,CHIP 82K 1/10W
R453	1-216-295-00	s	CONDUCTOR, CHIP (2012)
R456	1-216-295-00	s	CONDUCTOR, CHIP (2012)
R501	1-216-025-00	s	RESISTOR,CHIP 100 1/10W(2012)
R502	1-216-001-00	s	RESISTOR, CHIP 10 1/10W(2012)
R503	1-216-001-00	s	RESISTOR, CHIP 10 1/10W(2012)
R504	1-216-001-00	s	RESISTOR, CHIP 10 1/10W(2012)
R505	1-216-001-00	s	RESISTOR, CHIP 10 1/10W(2012)
R506	1-216-001-00	s	RESISTOR, CHIP 10 1/10W(2012)
R507	1-216-001-00	s	RESISTOR, CHIP 10 1/10W(2012)
R508	1-216-001-00	s	RESISTOR, CHIP 10 1/10W(2012)
R509	1-216-001-00	s	RESISTOR, CHIP 10 1/10W(2012)
R510	1-216-001-00	s	RESISTOR, CHIP 10 1/10W(2012)
R511	1-216-001-00	s	RESISTOR, CHIP 10 1/10W(2012)
R512	1-216-073-00	s	RESISTOR,CHIP 10K 1/10W(2012)
R513	1-216-001-00	s	RESISTOR, CHIP 10 1/10W(2012)
R514	1-216-001-00	s	RESISTOR, CHIP 10 1/10W(2012)
R515	1-216-031-00	s	RESISTOR,CHIP 180 1/10W(2012)
R516	1-216-025-00	s	RESISTOR,CHIP 100 1/10W(2012)
R517	1-216-025-00	s	RESISTOR,CHIP 100 1/10W(2012)
R518	1-216-001-00	s	RESISTOR, CHIP 10 1/10W(2012)
R519	1-216-001-00	s	RESISTOR, CHIP 10 1/10W(2012)
R520	1-216-073-00	s	RESISTOR,CHIP 10K 1/10W(2012)
R521	1-216-049-11	s	RESISTOR, CHIP 1K 1/10W(2012)
R525	1-216-049-11	s	RESISTOR, CHIP 1K 1/10W(2012)
R526	1-216-025-00	s	RESISTOR,CHIP 100 1/10W(2012)
R527	1-216-025-00	s	RESISTOR,CHIP 100 1/10W(2012)
R528	1-216-073-00	s	RESISTOR,CHIP 10K 1/10W(2012)
R529	1-216-073-00	s	RESISTOR,CHIP 10K 1/10W(2012)
R530	1-216-073-00	s	RESISTOR,CHIP 10K 1/10W(2012)
R531	1-216-025-00	s	RESISTOR,CHIP 100 1/10W(2012)
R532	1-216-073-00	s	RESISTOR,CHIP 10K 1/10W(2012)
R534	1-216-025-00	s	RESISTOR,CHIP 100 1/10W(2012)
R535	1-216-025-00	s	RESISTOR,CHIP 100 1/10W(2012)
R536	1-216-017-91	s	RESISTOR, CHIP 47 1/10W(2012)
R537	1-216-017-91	s	RESISTOR, CHIP 47 1/10W(2012)
R538	1-216-017-91	s	RESISTOR, CHIP 47 1/10W(2012)
R539	1-216-097-00	s	RESISTOR CHIP 100K 1/10W(2012)
R540	1-216-073-00	s	RESISTOR,CHIP 10K 1/10W(2012)
R541	1-216-073-00	s	RESISTOR,CHIP 10K 1/10W(2012)
R542	1-216-073-00	s	RESISTOR,CHIP 10K 1/10W(2012)
R543	1-216-025-00	s	RESISTOR,CHIP 100 1/10W(2012)
R544	1-216-025-00	s	RESISTOR,CHIP 100 1/10W(2012)
R545	1-216-025-00	s	RESISTOR,CHIP 100 1/10W(2012)
R546	1-216-025-00	s	RESISTOR,CHIP 100 1/10W(2012)
R548	1-216-025-00	s	RESISTOR,CHIP 100 1/10W(2012)
R549	1-216-025-00	s	RESISTOR,CHIP 100 1/10W(2012)
R550	1-216-009-00	s	RESISTOR,CHIP 22 1/10W (2012)
R551	1-216-025-00	s	RESISTOR,CHIP 100 1/10W(2012)
R552	1-216-073-00	s	RESISTOR,CHIP 10K 1/10W(2012)
R553	1-216-025-00	s	RESISTOR,CHIP 100 1/10W(2012)
R554	1-216-025-00	s	RESISTOR,CHIP 100 1/10W(2012)

(B BOARD)

Ref. No. or Q'ty	Part No.	SP	Description
R555	1-216-025-00	s	RESISTOR,CHIP 100 1/10W(2012)
R556	1-216-073-00	s	RESISTOR,CHIP 10K 1/10W(2012)
R557	1-216-025-00	s	RESISTOR,CHIP 100 1/10W(2012)
R558	1-216-025-00	s	RESISTOR,CHIP 100 1/10W(2012)
R559	1-216-025-00	s	RESISTOR,CHIP 100 1/10W(2012)
R560	1-216-025-00	s	RESISTOR,CHIP 100 1/10W(2012)
R561	1-216-025-00	s	RESISTOR,CHIP 100 1/10W(2012)
R562	1-216-025-00	s	RESISTOR,CHIP 100 1/10W(2012)
R563	1-216-634-11	s	RESISTOR,CHIP 200 1/10W(2012)
R564	1-216-662-11	s	RESISTOR,CHIP 3K 1/10W (2012)
R565	1-216-025-00	s	RESISTOR,CHIP 100 1/10W(2012)
R566	1-216-025-00	s	RESISTOR,CHIP 100 1/10W(2012)
R567	1-216-025-00	s	RESISTOR,CHIP 100 1/10W(2012)
R568	1-216-025-00	s	RESISTOR,CHIP 100 1/10W(2012)
R569	1-216-025-00	s	RESISTOR,CHIP 100 1/10W(2012)
R570	1-216-025-00	s	RESISTOR,CHIP 100 1/10W(2012)
R571	1-216-025-00	s	RESISTOR,CHIP 100 1/10W(2012)
R572	1-216-025-00	s	RESISTOR,CHIP 100 1/10W(2012)
R573	1-216-025-00	s	RESISTOR,CHIP 100 1/10W(2012)
R574	1-216-025-00	s	RESISTOR,CHIP 100 1/10W(2012)
R575	1-216-025-00	s	RESISTOR,CHIP 100 1/10W(2012)
R576	1-216-025-00	s	RESISTOR,CHIP 100 1/10W(2012)
R577	1-216-025-00	s	RESISTOR,CHIP 100 1/10W(2012)
R578	1-216-017-91	s	RESISTOR, CHIP 47 1/10W(2012)
R579	1-216-017-91	s	RESISTOR, CHIP 47 1/10W(2012)
R580	1-216-025-00	s	RESISTOR,CHIP 100 1/10W(2012)
R581	1-216-025-00	s	RESISTOR,CHIP 100 1/10W(2012)
R582	1-216-025-00	s	RESISTOR,CHIP 100 1/10W(2012)
R583	1-216-025-00	s	RESISTOR,CHIP 100 1/10W(2012)
R584	1-216-025-00	s	RESISTOR,CHIP 100 1/10W(2012)
R585	1-216-025-00	s	RESISTOR,CHIP 100 1/10W(2012)
R586	1-216-025-00	s	RESISTOR,CHIP 100 1/10W(2012)
R587	1-216-025-00	s	RESISTOR,CHIP 100 1/10W(2012)
R588	1-216-025-00	s	RESISTOR,CHIP 100 1/10W(2012)
R589	1-216-025-00	s	RESISTOR,CHIP 100 1/10W(2012)
R590	1-216-025-00	s	RESISTOR,CHIP 100 1/10W(2012)
R591	1-216-025-00	s	RESISTOR,CHIP 100 1/10W(2012)
R592	1-216-025-00	s	RESISTOR,CHIP 100 1/10W(2012)
R593	1-216-025-00	s	RESISTOR,CHIP 100 1/10W(2012)
R594	1-216-025-00	s	RESISTOR,CHIP 100 1/10W(2012)
R595	1-216-025-00	s	RESISTOR,CHIP 100 1/10W(2012)
R596	1-216-025-00	s	RESISTOR,CHIP 100 1/10W(2012)
R597	1-216-025-00	s	RESISTOR,CHIP 100 1/10W(2012)
R598	1-216-017-91	s	RESISTOR, CHIP 47 1/10W(2012)
R599	1-216-089-00	s	RESISTOR CHIP 47K 1/10W(2012)
R600	1-216-001-00	s	RESISTOR, CHIP 10 1/10W(2012)
R601	1-216-057-00	s	RESISTOR CHIP 2.2K 1/10W(2012)
R602	1-216-049-11	s	RESISTOR, CHIP 1K 1/10W(2012)
R603	1-216-001-00	s	RESISTOR, CHIP 10 1/10W(2012)
R604	1-216-057-00	s	RESISTOR CHIP 2.2K 1/10W(2012)
R605	1-216-057-00	s	RESISTOR CHIP 2.2K 1/10W(2012)
R606	1-216-057-00	s	RESISTOR CHIP 2.2K 1/10W(2012)
R607	1-216-001-00	s	RESISTOR, CHIP 10 1/10W(2012)
R608	1-216-001-00	s	RESISTOR, CHIP 10 1/10W(2012)
R609	1-216-017-91	s	RESISTOR, CHIP 47 1/10W(2012)
R610	1-216-017-91	s	RESISTOR, CHIP 47 1/10W(2012)
R611	1-216-017-91	s	RESISTOR, CHIP 47 1/10W(2012)
R612	1-216-017-91	s	RESISTOR, CHIP 47 1/10W(2012)
R613	1-216-001-00	s	RESISTOR, CHIP 10 1/10W(2012)
R614	1-216-001-00	s	RESISTOR, CHIP 10 1/10W(2012)

(B BOARD)

Ref. No. or Q'ty	Part No.	SP	Description
R616	1-216-083-00	s	RESISTOR CHIP 27K 1/10W(2012)
R617	1-216-097-00	s	RESISTOR CHIP 100K 1/10W(2012)
R618	1-216-083-00	s	RESISTOR CHIP 27K 1/10W(2012)
R619	1-216-025-00	s	RESISTOR,CHIP 100 1/10W(2012)
R620	1-216-025-00	s	RESISTOR,CHIP 100 1/10W(2012)
R621	1-216-113-00	s	RESISTOR CHIP 470K 1/10W(2012)
R624	1-216-025-00	s	RESISTOR,CHIP 100 1/10W(2012)
R632	1-216-001-00	s	RESISTOR, CHIP 10 1/10W(2012)
R633	1-216-025-00	s	RESISTOR,CHIP 100 1/10W(2012)
R634	1-216-025-00	s	RESISTOR,CHIP 100 1/10W(2012)
R635	1-216-025-00	s	RESISTOR,CHIP 100 1/10W(2012)
R636	1-216-009-00	s	RESISTOR,CHIP 22 1/10W (2012)
R637	1-216-009-00	s	RESISTOR,CHIP 22 1/10W (2012)
R700	1-216-675-11	s	RESISTOR,CHIP 10K 1/10W(2012)
R701	1-216-681-11	s	RESISTOR,CHIP 18K 1/10W (2012)
R702	1-216-025-00	s	RESISTOR,CHIP 100 1/10W(2012)
R703	1-216-071-00	s	RESISTOR,CHIP 8.2K 1/10W(2012)
R704	1-216-085-00	s	RESISTOR CHIP 33K 1/10W(2012)
R705	1-216-097-00	s	RESISTOR CHIP 100K 1/10W(2012)
R706	1-216-097-00	s	RESISTOR CHIP 100K 1/10W(2012)
R707	1-216-097-00	s	RESISTOR CHIP 100K 1/10W(2012)
R708	1-216-097-00	s	RESISTOR CHIP 100K 1/10W(2012)
R709	1-216-059-00	s	RESISTOR,CHIP 2.7K 1/10W(2012)
R710	1-216-073-00	s	RESISTOR,CHIP 10K 1/10W(2012)
R711	1-216-049-11	s	RESISTOR, CHIP 1K 1/10W(2012)
R712	1-216-049-11	s	RESISTOR, CHIP 1K 1/10W(2012)
R713	1-216-049-11	s	RESISTOR, CHIP 1K 1/10W(2012)
R714	1-216-049-11	s	RESISTOR, CHIP 1K 1/10W(2012)
R715	1-216-073-00	s	RESISTOR,CHIP 10K 1/10W(2012)
R716	1-249-381-11	s	RES,CARBON 1 (1/4W)
R717	1-216-049-11	s	RESISTOR, CHIP 1K 1/10W(2012)
R718	1-216-073-00	s	RESISTOR,CHIP 10K 1/10W(2012)
R719	1-216-073-00	s	RESISTOR,CHIP 10K 1/10W(2012)
R720	1-216-001-00	s	RESISTOR, CHIP 10 1/10W(2012)
R721	1-216-073-00	s	RESISTOR,CHIP 10K 1/10W(2012)
R722	1-216-073-00	s	RESISTOR,CHIP 10K 1/10W(2012)
R723	1-216-001-00	s	RESISTOR, CHIP 10 1/10W(2012)
R724	1-216-001-00	s	RESISTOR, CHIP 10 1/10W(2012)
R725	1-216-001-00	s	RESISTOR, CHIP 10 1/10W(2012)
R726	1-216-001-00	s	RESISTOR, CHIP 10 1/10W(2012)
R727	1-216-001-00	s	RESISTOR, CHIP 10 1/10W(2012)
R728	1-216-073-00	s	RESISTOR,CHIP 10K 1/10W(2012)
R729	1-216-073-00	s	RESISTOR,CHIP 10K 1/10W(2012)
R830	1-216-369-00	s	RESISTOR,METAL FILM 1.00 2W
R831	1-249-377-11	s	RES,CARBON 0.47 1/4W
R832	1-249-377-11	s	RES,CARBON 0.47 1/4W
R901	1-216-033-00	s	RESISTOR,CHIP 220 1/10W(2012)
R902	1-216-033-00	s	RESISTOR,CHIP 220 1/10W(2012)
R918	1-216-057-00	s	RESISTOR CHIP 2.2K 1/10W(2012)
R919	1-216-033-00	s	RESISTOR,CHIP 220 1/10W(2012)
R921	1-216-057-00	s	RESISTOR CHIP 2.2K 1/10W(2012)
R922	1-216-033-00	s	RESISTOR,CHIP 220 1/10W(2012)
R931	1-216-057-00	s	RESISTOR CHIP 2.2K 1/10W(2012)
R932	1-216-033-00	s	RESISTOR,CHIP 220 1/10W(2012)
R934	1-216-057-00	s	RESISTOR CHIP 2.2K 1/10W(2012)
R935	1-216-033-00	s	RESISTOR,CHIP 220 1/10W(2012)
R941	1-216-017-91	s	RESISTOR,CHIP 47K 1/10W
R942	1-216-017-91	s	RESISTOR,CHIP 47K 1/10W
R1000	1-216-681-11	s	RESISTOR,CHIP 18K 1/10W (2012)
R1001	1-216-687-11	s	RESISTOR CHIP 33K 1/10W (2012)

(B BOARD)

Ref. No. or Q'ty	Part No.	SP	Description
R1002	1-216-681-11	s	RESISTOR,CHIP 18K 1/10W (2012)
R1003	1-216-687-11	s	RESISTOR CHIP 33K 1/10W (2012)
R1004	1-216-681-11	s	RESISTOR,CHIP 18K 1/10W (2012)
R1005	1-216-687-11	s	RESISTOR CHIP 33K 1/10W (2012)
R1006	1-216-055-00	s	RESISTOR CHIP 1.8K 1/10W(2012)
R1007	1-216-061-00	s	RESISTOR CHIP 3.3K 1/10W(2012)
R1008	1-216-049-11	s	RESISTOR, CHIP 1K 1/10W(2012)
R1009	1-216-049-11	s	RESISTOR, CHIP 1K 1/10W(2012)
R1010	1-216-687-11	s	RESISTOR CHIP 33K 1/10W (2012)
R1011	1-216-681-11	s	RESISTOR,CHIP 18K 1/10W (2012)
R1012	1-216-041-00	s	RESISTOR, CHIP 470 1/10W(2012)
R1013	1-216-657-11	s	RESISTOR,CHIP 1.8K 1/10W(2012)
R1014	1-216-069-00	s	RESISTOR,CHIP 6.8K 1/10W(2012)
R1015	1-216-025-00	s	RESISTOR,CHIP 100 1/10W(2012)
R1016	1-216-025-00	s	RESISTOR,CHIP 100 1/10W(2012)
R1017	1-216-025-00	s	RESISTOR,CHIP 100 1/10W(2012)
R1018	1-216-651-11	s	RESISTOR,CHIP 1K 1/10W(2012)
R1019	1-216-049-11	s	RESISTOR, CHIP 1K 1/10W(2012)
R1020	1-216-651-11	s	RESISTOR,CHIP 1K 1/10W(2012)
R1021	1-216-049-11	s	RESISTOR, CHIP 1K 1/10W(2012)
R1022	1-216-651-11	s	RESISTOR,CHIP 1K 1/10W(2012)
R1023	1-216-049-11	s	RESISTOR, CHIP 1K 1/10W(2012)
R1024	1-216-651-11	s	RESISTOR,CHIP 1K 1/10W(2012)
R1025	1-216-025-00	s	RESISTOR,CHIP 100 1/10W(2012)
R1026	1-216-651-11	s	RESISTOR,CHIP 1K 1/10W(2012)
R1027	1-216-025-00	s	RESISTOR,CHIP 100 1/10W(2012)
R1028	1-216-651-11	s	RESISTOR,CHIP 1K 1/10W(2012)
R1029	1-216-025-00	s	RESISTOR,CHIP 100 1/10W(2012)
R1030	1-216-045-00	s	RESISTOR,CHIP 680 1/10W(2012)
R1031	1-216-045-00	s	RESISTOR,CHIP 680 1/10W(2012)
R1032	1-216-045-00	s	RESISTOR,CHIP 680 1/10W(2012)
R1033	1-216-009-91	s	RESISTOR,CHIP 22 1/10W(2012)
R1034	1-216-009-91	s	RESISTOR,CHIP 22 1/10W(2012)
R1035	1-216-069-00	s	RESISTOR,CHIP 6.8K 1/10W(2012)
R1036	1-216-025-00	s	RESISTOR,CHIP 100 1/10W(2012)
R1037	1-216-069-00	s	RESISTOR,CHIP 6.8K 1/10W(2012)
R1038	1-216-659-11	s	RESISTOR,CHIP 2.2K 1/10W(2012)
R1039	1-216-097-00	s	RESISTOR CHIP 100K 1/10W(2012)
R1040	1-216-657-11	s	RESISTOR,CHIP 1.8K 1/10W(2012)
R1041	1-216-683-11	s	RESISTOR,CHIP 22K 1/10W (2012)
R1043	1-216-057-00	s	RESISTOR CHIP 2.2K 1/10W(2012)
R1044	1-216-065-91	s	RESISTOR,CHIP 4.7K 1/10W(2012)
R1045	1-216-057-00	s	RESISTOR CHIP 2.2K 1/10W(2012)
R1046	1-216-669-11	s	RESISTOR,CHIP 5.6K 1/10W(2012)
R1047	1-216-667-11	s	RESISTOR,CHIP 4.7K 1/10W(2012)
R1048	1-216-676-11	s	RESISTOR,CHIP 11K 1/10W(2012)
R1049	1-216-661-11	s	RESISTOR,CHIP 2.7K 1/10W(2012)
R1050	1-216-651-11	s	RESISTOR,CHIP 1K 1/10W(2012)
R1051	1-216-651-11	s	RESISTOR,CHIP 1K 1/10W(2012)
R1052	1-216-635-11	s	RESISTOR,CHIP 220 1/10W (2012)
R1053	1-216-651-11	s	RESISTOR,CHIP 1K 1/10W(2012)
R1054	1-216-651-11	s	RESISTOR,CHIP 1K 1/10W(2012)
R1055	1-216-073-00	s	RESISTOR,CHIP 10K 1/10W(2012)
R1056	1-216-652-11	s	RESISTOR,CHIP 1.1K 1/10W(2012)
R1057	1-216-663-11	s	RESISTOR,CHIP 3.3K 1/10W(2012)
R1058	1-216-661-11	s	RESISTOR,CHIP 2.7K 1/10W(2012)
R1059	1-216-653-11	s	RESISTOR,CHIP 1.2K 1/10W(2012)
R1060	1-216-643-11	s	RESISTOR,CHIP 470 1/10W (2012)
R1062	1-216-049-11	s	RESISTOR, CHIP 1K 1/10W(2012)
R1063	1-216-631-11	s	RESISTOR,CHIP 150 1/10W (2012)

(B BOARD)

Ref. No. or Q'ty	Part No.	SP	Description
R1064	1-216-627-11	s	RESISTOR,CHIP 100 1/10W (2012)
R1065	1-216-661-11	s	RESISTOR,CHIP 2.7K 1/10W(2012)
R1066	1-216-667-11	s	RESISTOR,CHIP 4.7K 1/10W(2012)
R1067	1-216-017-91	s	RESISTOR, CHIP 47 1/10W(2012)
R1068	1-216-117-00	s	RESISTOR,CHIP 680K 1/10W(2012)
R1069	1-216-017-91	s	RESISTOR, CHIP 47 1/10W(2012)
R1070	1-216-021-00	s	RESISTOR,CHIP 68 1/10W(2012)
R1071	1-216-053-00	s	RESISTOR CHIP 1.5K 1/10W(2012)
R1073	1-216-041-00	s	RESISTOR, CHIP 470 1/10W(2012)
R1074	1-216-295-00	s	CONDUCTOR, CHIP (2012)
R1075	1-216-055-00	s	RESISTOR CHIP 1.8K 1/10W(2012)
R1076	1-216-055-00	s	RESISTOR CHIP 1.8K 1/10W(2012)
R1077	1-216-055-00	s	RESISTOR CHIP 1.8K 1/10W(2012)
R1078	1-216-055-00	s	RESISTOR CHIP 1.8K 1/10W(2012)
R1079	1-216-079-00	s	RESISTOR CHIP 18K 1/10W(2012)
R1080	1-216-077-00	s	RESISTOR,CHIP 15K 1/10W(2012)
R1081	1-216-025-00	s	RESISTOR,CHIP 100 1/10W(2012)
R1082	1-216-055-00	s	RESISTOR CHIP 1.8K 1/10W(2012)
R1083	1-216-001-00	s	RESISTOR, CHIP 10 1/10W(2012)
R1084	1-216-043-91	s	RESISTOR, CHIP 560 1/10W(2125)
R1085	1-216-295-00	s	CONDUCTOR, CHIP (2012)
R1086	1-216-295-00	s	CONDUCTOR, CHIP (2012)
R1087	1-216-295-00	s	CONDUCTOR, CHIP (2012)
R1088	1-216-627-11	s	RESISTOR,CHIP 100 1/10W (2012)
R1090	1-216-067-00	s	RESISTOR,CHIP 5.6K 1/10W(2012)
R1091	1-216-077-00	s	RESISTOR,CHIP 15K 1/10W(2012)
R1092	1-216-295-00	s	CONDUCTOR, CHIP (2012)
R1093	1-216-055-00	s	RESISTOR CHIP 1.8K 1/10W(2012)
R1094	1-216-001-00	s	RESISTOR, CHIP 10 1/10W(2012)
R1095	1-216-645-11	s	RESISTOR,CHIP 560 1/10W(2012)
R1096	1-216-045-00	s	RESISTOR,CHIP 680 1/10W(2012)
R1097	1-216-057-00	s	RESISTOR CHIP 2.2K 1/10W(2012)
R1098	1-216-023-00	s	RESISTOR,CHIP 82 1/10W(2012)
R1099	1-216-627-11	s	RESISTOR,CHIP 100 1/10W (2012)
R1100	1-216-053-00	s	RESISTOR CHIP 1.5K 1/10W(2012)
R1101	1-216-053-00	s	RESISTOR CHIP 1.5K 1/10W(2012)
R1102	1-216-073-00	s	RESISTOR,CHIP 10K 1/10W(2012)
R1103	1-216-073-00	s	RESISTOR,CHIP 10K 1/10W(2012)
R1104	1-216-049-11	s	RESISTOR, CHIP 1K 1/10W(2012)
R1105	1-216-069-00	s	RESISTOR,CHIP 6.8K 1/10W(2012)
R1109	1-216-073-00	s	RESISTOR,CHIP 10K 1/10W(2012)
R1110	1-216-659-11	s	RESISTOR,CHIP 2.2K 1/10W(2012)
R1111	1-216-659-11	s	RESISTOR,CHIP 2.2K 1/10W(2012)
R1115	1-216-675-11	s	RESISTOR,CHIP 10K 1/10W(2012)
R1116	1-216-073-00	s	RESISTOR,CHIP 10K 1/10W(2012)
R1117	1-216-053-00	s	RESISTOR CHIP 1.5K 1/10W(2012)
R1118	1-216-073-00	s	RESISTOR,CHIP 10K 1/10W(2012)
R1119	1-216-073-00	s	RESISTOR,CHIP 10K 1/10W(2012)
R1120	1-216-675-11	s	RESISTOR,CHIP 10K 1/10W(2012)
R1121	1-216-065-91	s	RESISTOR,CHIP 4.7K 1/10W(2012)
R1122	1-216-619-11	s	RESISTOR CHIP 47 1/10W(2012)
R1123	1-216-049-11	s	RESISTOR, CHIP 1K 1/10W(2012)
R1124	1-216-049-11	s	RESISTOR, CHIP 1K 1/10W(2012)
R1126	1-216-073-00	s	RESISTOR,CHIP 10K 1/10W(2012)
R1127	1-216-073-00	s	RESISTOR,CHIP 10K 1/10W(2012)
R1129	1-216-676-11	s	RESISTOR,CHIP 11K 1/10W(2012)
R1130	1-216-045-00	s	RESISTOR,CHIP 680 1/10W(2012)
R1131	1-216-671-11	s	RESISTOR,CHIP 6.8K 1/10W(2012)
R1132	1-216-073-00	s	RESISTOR,CHIP 10K 1/10W(2012)
R1133	1-216-073-00	s	RESISTOR,CHIP 10K 1/10W(2012)

(B BOARD)

Ref. No. or Q'ty	Part No.	SP	Description
R1134	1-216-073-00	s	RESISTOR,CHIP 10K 1/10W(2012)
R1135	1-216-295-00	s	CONDUCTOR, CHIP (2012)
R1136	1-216-073-00	s	RESISTOR,CHIP 10K 1/10W(2012)
R1137	1-216-025-00	s	RESISTOR,CHIP 100 1/10W(2012)
R1138	1-216-061-00	s	RESISTOR CHIP 3.3K 1/10W(2012)
R1139	1-216-037-00	s	RESISTOR,CHIP 330 1/10W(2012)
R1140	1-216-643-11	s	RESISTOR,CHIP 470 1/10W (2012)
R1141	1-216-651-11	s	RESISTOR,CHIP 1K 1/10W(2012)
R1142	1-216-049-11	s	RESISTOR, CHIP 1K 1/10W(2012)
R1143	1-216-065-91	s	RESISTOR,CHIP 4.7K 1/10W(2012)
R1144	1-216-651-11	s	RESISTOR,CHIP 1K 1/10W(2012)
R1145	1-216-673-11	s	RESISTOR,CHIP 8.2K 1/10W(2012)
R1146	1-216-045-00	s	RESISTOR,CHIP 680 1/10W(2012)
R1147	1-216-647-11	s	RESISTOR,CHIP 680 1/10W (2012)
R1148	1-216-025-00	s	RESISTOR,CHIP 100 1/10W(2012)
R1149	1-216-661-11	s	RESISTOR,CHIP 2.7K 1/10W(2012)
R1150	1-216-667-11	s	RESISTOR,CHIP 4.7K 1/10W(2012)
R1151	1-216-073-00	s	RESISTOR,CHIP 10K 1/10W(2012)
R1152	1-216-061-00	s	RESISTOR CHIP 3.3K 1/10W(2012)
R1153	1-216-057-00	s	RESISTOR CHIP 2.2K 1/10W(2012)
R1154	1-216-657-11	s	RESISTOR,CHIP 1.8K 1/10W(2012)
R1155	1-216-681-11	s	RESISTOR,CHIP 18K 1/10W (2012)
R1156	1-216-643-11	s	RESISTOR,CHIP 470 1/10W (2012)
R1157	1-216-651-11	s	RESISTOR,CHIP 1K 1/10W(2012)
R1158	1-216-667-11	s	RESISTOR,CHIP 4.7K 1/10W(2012)
R1159	1-216-647-11	s	RESISTOR,CHIP 680 1/10W (2012)
R1160	1-216-667-11	s	RESISTOR,CHIP 4.7K 1/10W(2012)
R1161	1-216-647-11	s	RESISTOR,CHIP 680 1/10W (2012)
R1162	1-216-667-11	s	RESISTOR,CHIP 4.7K 1/10W(2012)
R1163	1-216-647-11	s	RESISTOR,CHIP 680 1/10W (2012)
R1164	1-216-647-11	s	RESISTOR,CHIP 680 1/10W (2012)
R1165	1-216-657-11	s	RESISTOR,CHIP 1.8K 1/10W(2012)
R1166	1-216-069-00	s	RESISTOR,CHIP 6.8K 1/10W(2012)
R1167	1-216-025-00	s	RESISTOR,CHIP 100 1/10W(2012)
R1168	1-216-069-00	s	RESISTOR,CHIP 6.8K 1/10W(2012)
R1169	1-216-061-00	s	RESISTOR CHIP 3.3K 1/10W(2012)
R1170	1-216-069-00	s	RESISTOR,CHIP 6.8K 1/10W(2012)
R1171	1-216-643-11	s	RESISTOR,CHIP 470 1/10W (2012)
R1172	1-216-651-11	s	RESISTOR,CHIP 1K 1/10W(2012)
R1173	1-216-061-00	s	RESISTOR CHIP 3.3K 1/10W(2012)
R1174	1-216-647-11	s	RESISTOR,CHIP 680 1/10W (2012)
R1175	1-216-657-11	s	RESISTOR,CHIP 1.8K 1/10W(2012)
R1176	1-216-049-11	s	RESISTOR, CHIP 1K 1/10W(2012)
R1177	1-216-679-11	s	RESISTOR,CHIP 15K 1/10W (2012)
R1178	1-216-681-11	s	RESISTOR,CHIP 18K 1/10W (2012)
R1179	1-218-758-11	s	RESISTOR,CHIP 180K 1/10W(2012)
R1180	1-216-671-11	s	RESISTOR,CHIP 6.8K 1/10W(2012)
R1181	1-216-675-11	s	RESISTOR,CHIP 10K 1/10W(2012)
R1182	1-216-025-00	s	RESISTOR,CHIP 100 1/10W(2012)
R1183	1-218-756-11	s	RESISTOR,CHIP 150K 1/10W(2012)
R1184	1-216-065-91	s	RESISTOR,CHIP 4.7K 1/10W(2012)
R1185	1-216-065-91	s	RESISTOR,CHIP 4.7K 1/10W(2012)
R1186	1-216-065-91	s	RESISTOR,CHIP 4.7K 1/10W(2012)
R1187	1-216-065-91	s	RESISTOR,CHIP 4.7K 1/10W(2012)
R1188	1-216-065-91	s	RESISTOR,CHIP 4.7K 1/10W(2012)
R1189	1-216-065-91	s	RESISTOR,CHIP 4.7K 1/10W(2012)
R1190	1-216-071-00	s	RESISTOR,CHIP 8.2K 1/10W(2012)
R1191	1-216-073-00	s	RESISTOR,CHIP 10K 1/10W(2012)
R1192	1-216-077-00	s	RESISTOR,CHIP 15K 1/10W(2012)
R1193	1-216-073-00	s	RESISTOR,CHIP 10K 1/10W(2012)

(B BOARD)

Ref. No. or Q'ty	Part No.	SP	Description
R1194	1-216-077-00	s	RESISTOR,CHIP 15K 1/10W(2012)
R1195	1-216-025-00	s	RESISTOR,CHIP 100 1/10W(2012)
R1196	1-216-649-11	s	RESISTOR,CHIP 820 1/10W (2012)
R1197	1-216-647-11	s	RESISTOR,CHIP 680 1/10W (2012)
R1198	1-216-651-11	s	RESISTOR,CHIP 1K 1/10W(2012)
R1199	1-216-025-00	s	RESISTOR,CHIP 100 1/10W(2012)
R1200	1-216-025-00	s	RESISTOR,CHIP 100 1/10W(2012)
R1201	1-216-649-11	s	RESISTOR,CHIP 820 1/10W (2012)
R1202	1-216-647-11	s	RESISTOR,CHIP 680 1/10W (2012)
R1203	1-216-651-11	s	RESISTOR,CHIP 1K 1/10W(2012)
R1204	1-216-627-11	s	RESISTOR,CHIP 100 1/10W (2012)
R1205	1-216-649-11	s	RESISTOR,CHIP 820 1/10W (2012)
R1206	1-216-647-11	s	RESISTOR,CHIP 680 1/10W (2012)
R1207	1-216-651-11	s	RESISTOR,CHIP 1K 1/10W(2012)
R1208	1-216-627-11	s	RESISTOR,CHIP 100 1/10W (2012)
R1209	1-216-627-11	s	RESISTOR,CHIP 100 1/10W (2012)
R1210	1-216-643-11	s	RESISTOR,CHIP 470 1/10W (2012)
R1211	1-216-295-00	s	CONDUCTOR, CHIP (2012)
R1212	1-216-645-11	s	RESISTOR,CHIP 560 1/10W(2012)
R1213	1-216-641-11	s	RESISTOR,CHIP 390 1/10W(2012)
R1214	1-216-295-00	s	CONDUCTOR, CHIP (2012)
R1215	1-216-643-11	s	RESISTOR,CHIP 470 1/10W (2012)
R1216	1-216-295-00	s	CONDUCTOR, CHIP (2012)
R1217	1-216-645-11	s	RESISTOR,CHIP 560 1/10W(2012)
R1218	1-216-645-11	s	RESISTOR,CHIP 560 1/10W(2012)
R1219	1-216-669-11	s	RESISTOR,CHIP 5.6K 1/10W(2012)
R1220	1-216-043-91	s	RESISTOR, CHIP 560 1/10W(2125)
R1221	1-216-669-11	s	RESISTOR,CHIP 5.6K 1/10W(2012)
R1222	1-216-043-91	s	RESISTOR, CHIP 560 1/10W(2125)
R1223	1-216-669-11	s	RESISTOR,CHIP 5.6K 1/10W(2012)
R1224	1-216-043-91	s	RESISTOR, CHIP 560 1/10W(2125)
R1225	1-216-113-00	s	RESISTOR CHIP 470K 1/10W(2012)
R1226	1-216-081-00	s	RESISTOR,CHIP 22K 1/10W(2012)
R1227	1-216-033-00	s	RESISTOR,CHIP 220 1/10W(2012)
R1228	1-216-025-00	s	RESISTOR,CHIP 100 1/10W(2012)
R1229	1-216-025-00	s	RESISTOR,CHIP 100 1/10W(2012)
R1230	1-216-049-11	s	RESISTOR, CHIP 1K 1/10W(2012)
R1231	1-216-037-00	s	RESISTOR,CHIP 330 1/10W(2012)
R1232	1-216-033-00	s	RESISTOR,CHIP 220 1/10W(2012)
R1233	1-216-061-00	s	RESISTOR CHIP 3.3K 1/10W(2012)
R1234	1-216-653-11	s	RESISTOR,CHIP 1.2K 1/10W(2012)
R1235	1-216-675-11	s	RESISTOR,CHIP 10K 1/10W(2012)
R1236	1-216-651-11	s	RESISTOR,CHIP 1K 1/10W(2012)
R1237	1-216-057-00	s	RESISTOR CHIP 2.2K 1/10W(2012)
R1238	1-216-062-00	s	RESISTOR,CHIP 3.6K 1/10W(2012)
R1240	1-216-295-00	s	CONDUCTOR, CHIP (2012)
R1241	1-216-113-00	s	RESISTOR CHIP 470K 1/10W(2012)
R1242	1-216-295-00	s	CONDUCTOR, CHIP (2012)
R1243	1-216-057-00	s	RESISTOR CHIP 2.2K 1/10W(2012)
R1244	1-216-073-00	s	RESISTOR,CHIP 10K 1/10W(2012)
R1247	1-216-295-00	s	CONDUCTOR, CHIP (2012)
R1249	1-216-295-00	s	CONDUCTOR, CHIP (2012)
R1250	1-216-295-00	s	CONDUCTOR, CHIP (2012)
R1251	1-216-073-00	s	RESISTOR,CHIP 10K 1/10W(2012)
R1252	1-216-061-00	s	RESISTOR CHIP 3.3K 1/10W(2012)
R1253	1-216-295-00	s	CONDUCTOR, CHIP (2012)
R1254	1-216-295-00	s	CONDUCTOR, CHIP (2012)
R1256	1-216-295-00	s	CONDUCTOR, CHIP (2012)
R1261	1-216-646-11	s	RESISTOR,CHIP 620 1/10W (2012)
R1262	1-216-635-11	s	RESISTOR,CHIP 220 1/10W (2012)

(B BOARD)

Ref. No. or Q'ty	Part No.	SP	Description
R1263	1-216-035-00	s	RESISTOR, CHIP 270 1/10W(2012)
R1264	1-216-663-11	s	RESISTOR,CHIP 3.3K 1/10W(2012)
R1265	1-216-635-11	s	RESISTOR,CHIP 220 1/10W (2012)
R1266	1-216-635-11	s	RESISTOR,CHIP 220 1/10W (2012)
R1267	1-216-295-00	s	CONDUCTOR, CHIP (2012)
R1269	1-216-057-00	s	RESISTOR CHIP 2.2K 1/10W(2012)
R1270	1-216-045-00	s	RESISTOR,CHIP 680 1/10W(2012)
R1271	1-216-025-00	s	RESISTOR,CHIP 100 1/10W(2012)
R1272	1-216-025-00	s	RESISTOR,CHIP 100 1/10W(2012)
R1273	1-216-047-91	s	RESISTOR, CHIP 820 1/10W(2125)
R1274	1-216-025-00	s	RESISTOR,CHIP 100 1/10W(2012)
R1275	1-216-057-00	s	RESISTOR CHIP 2.2K 1/10W(2012)
R1276	1-216-045-00	s	RESISTOR,CHIP 680 1/10W(2012)
R1277	1-216-049-11	s	RESISTOR, CHIP 1K 1/10W(2012)
R1278	1-216-025-00	s	RESISTOR,CHIP 100 1/10W(2012)
R1279	1-216-117-00	s	RESISTOR,CHIP 680K 1/10W(2012)
R1280	1-216-066-00	s	RESISTOR,CHIP 5.1K 1/10W(2012)
R1281	1-216-057-00	s	RESISTOR CHIP 2.2K 1/10W(2012)
R1282	1-216-045-00	s	RESISTOR,CHIP 680 1/10W(2012)
R1283	1-216-117-00	s	RESISTOR,CHIP 680K 1/10W(2012)
R1284	1-216-295-00	s	CONDUCTOR, CHIP (2012)
R1286	1-216-089-00	s	RESISTOR CHIP 47K 1/10W(2012)
R1287	1-216-037-00	s	RESISTOR,CHIP 330 1/10W(2012)
R1288	1-216-295-00	s	CONDUCTOR, CHIP (2012)
R1289	1-216-037-00	s	RESISTOR,CHIP 330 1/10W(2012)
R1290	1-216-077-00	s	RESISTOR,CHIP 15K 1/10W(2012)
R1291	1-216-673-11	s	RESISTOR,CHIP 8.2K 1/10W(2012)
R1292	1-216-668-11	s	RESISTOR,CHIP 5.1K 1/10W(2012)
R1293	1-216-077-00	s	RESISTOR,CHIP 15K 1/10W(2012)
R1294	1-216-077-00	s	RESISTOR,CHIP 15K 1/10W(2012)
R1295	1-216-295-00	s	CONDUCTOR, CHIP (2012)
R1296	1-216-295-00	s	CONDUCTOR, CHIP (2012)
R1297	1-216-655-11	s	RESISTOR,CHIP 1.5K 1/10W(2012)
R1298	1-216-666-11	s	RESISTOR,CHIP 4.3K 1/10W(2012)
R1301	1-216-295-00	s	CONDUCTOR, CHIP (2012)
R1305	1-216-671-11	s	RESISTOR,CHIP 6.8K 1/10W(2012)
R1306	1-216-667-11	s	RESISTOR,CHIP 4.7K 1/10W(2012)
R1308	1-216-671-11	s	RESISTOR,CHIP 6.8K 1/10W(2012)
R1309	1-216-667-11	s	RESISTOR,CHIP 4.7K 1/10W(2012)
R1311	1-216-667-11	s	RESISTOR,CHIP 4.7K 1/10W(2012)
R1313	1-216-671-11	s	RESISTOR,CHIP 6.8K 1/10W(2012)
R1314	1-216-093-00	s	RESISTOR, CHIP 68K 1/10W(2012)
R1315	1-216-683-11	s	RESISTOR,CHIP 22K 1/10W (2012)
R1316	1-216-669-11	s	RESISTOR,CHIP 5.6K 1/10W(2012)
R1317	1-216-661-11	s	RESISTOR,CHIP 2.7K 1/10W(2012)
R1318	1-216-669-11	s	RESISTOR,CHIP 5.6K 1/10W(2012)
R1319	1-216-683-11	s	RESISTOR,CHIP 22K 1/10W (2012)
R1320	1-216-661-11	s	RESISTOR,CHIP 2.7K 1/10W(2012)
R1322	1-216-295-00	s	CONDUCTOR, CHIP (2012)
R1323	1-216-025-00	s	RESISTOR,CHIP 100 1/10W(2012)
R1324	1-216-025-00	s	RESISTOR,CHIP 100 1/10W(2012)
R1326	1-216-295-00	s	CONDUCTOR, CHIP (2012)
R1327	1-218-758-11	s	RESISTOR,CHIP 180K 1/10W(2012)
R4000	1-216-049-11	s	RESISTOR, CHIP 1K 1/10W(2012)
R4001	1-216-681-11	s	RESISTOR,CHIP 18K 1/10W (2012)
R4002	1-216-057-00	s	RESISTOR CHIP 2.2K 1/10W(2012)
R4003	1-216-055-00	s	RESISTOR CHIP 1.8K 1/10W(2012)
R4004	1-216-025-00	s	RESISTOR,CHIP 100 1/10W(2012)
R4005	1-216-061-00	s	RESISTOR CHIP 3.3K 1/10W(2012)
R4006	1-216-675-11	s	RESISTOR,CHIP 10K 1/10W(2012)

(B BOARD)

Ref. No. or Q'ty	Part No.	SP	Description
R4007	1-216-061-00	s	RESISTOR CHIP 3.3K 1/10W(2012)
R4008	1-216-053-00	s	RESISTOR CHIP 1.5K 1/10W(2012)
R4009	1-216-049-11	s	RESISTOR, CHIP 1K 1/10W(2012)
R4010	1-216-651-11	s	RESISTOR,CHIP 1K 1/10W(2012)
R4011	1-216-075-00	s	RESISTOR CHIP 12K 1/10W(2012)
R4012	1-216-063-91	s	RESISTOR,CHIP 3.9K 1/10W(2125)
R4013	1-216-061-00	s	RESISTOR CHIP 3.3K 1/10W(2012)
R4014	1-216-081-00	s	RESISTOR,CHIP 22K 1/10W(2012)
R4015	1-216-053-00	s	RESISTOR CHIP 1.5K 1/10W(2012)
R4016	1-216-085-00	s	RESISTOR CHIP 33K 1/10W(2012)
R4017	1-216-001-00	s	RESISTOR, CHIP 10 1/10W(2012)
R4018	1-216-049-11	s	RESISTOR, CHIP 1K 1/10W(2012)
R4019	1-216-069-00	s	RESISTOR,CHIP 6.8K 1/10W(2012)
R4020	1-216-065-91	s	RESISTOR,CHIP 4.7K 1/10W(2012)
R4021	1-216-049-11	s	RESISTOR, CHIP 1K 1/10W(2012)
R4022	1-216-648-11	s	RESISTOR,CHIP 750 1/10W (2012)
R4023	1-216-636-11	s	RESISTOR CHIP 240 1/10W (2012)
R4024	1-216-073-00	s	RESISTOR,CHIP 10K 1/10W(2012)
R4025	1-216-057-00	s	RESISTOR CHIP 2.2K 1/10W(2012)
R4026	1-216-001-00	s	RESISTOR, CHIP 10 1/10W(2012)
R4027	1-216-049-11	s	RESISTOR, CHIP 1K 1/10W(2012)
R4028	1-216-049-11	s	RESISTOR, CHIP 1K 1/10W(2012)
R4029	1-216-077-00	s	RESISTOR,CHIP 15K 1/10W(2012)
R4030	1-216-651-11	s	RESISTOR,CHIP 1K 1/10W(2012)
R4031	1-216-063-91	s	RESISTOR,CHIP 3.9K 1/10W(2125)
R4032	1-216-065-91	s	RESISTOR,CHIP 4.7K 1/10W(2012)
R4033	1-216-073-00	s	RESISTOR,CHIP 10K 1/10W(2012)
R4034	1-216-049-11	s	RESISTOR, CHIP 1K 1/10W(2012)
R4035	1-216-063-91	s	RESISTOR,CHIP 3.9K 1/10W(2125)
R4036	1-216-053-00	s	RESISTOR CHIP 1.5K 1/10W(2012)
R4037	1-216-049-11	s	RESISTOR, CHIP 1K 1/10W(2012)
R4038	1-216-049-11	s	RESISTOR, CHIP 1K 1/10W(2012)
R4039	1-216-105-91	s	RESISTOR,CHIP 220K 1/10W(2125)
R4040	1-216-097-00	s	RESISTOR CHIP 100K 1/10W(2012)
R4041	1-216-065-91	s	RESISTOR,CHIP 4.7K 1/10W(2012)
R4042	1-216-081-00	s	RESISTOR,CHIP 22K 1/10W(2012)
R4043	1-216-049-11	s	RESISTOR, CHIP 1K 1/10W(2012)
R4044	1-216-049-11	s	RESISTOR, CHIP 1K 1/10W(2012)
R4045	1-216-049-11	s	RESISTOR, CHIP 1K 1/10W(2012)
R4046	1-216-049-11	s	RESISTOR, CHIP 1K 1/10W(2012)
R4047	1-216-063-91	s	RESISTOR,CHIP 3.9K 1/10W(2125)
R4048	1-216-650-11	s	RESISTOR,CHIP 910 1/10W(2012)
R4049	1-216-626-11	s	RESISTOR,CHIP 91 1/10W(2012)
R4050	1-216-057-00	s	RESISTOR CHIP 2.2K 1/10W(2012)
R4051	1-216-049-11	s	RESISTOR, CHIP 1K 1/10W(2012)
R4052	1-216-049-11	s	RESISTOR, CHIP 1K 1/10W(2012)
R4053	1-216-624-11	s	RESISTOR,CHIP 75 1/10W(2012)
R4054	1-216-073-00	s	RESISTOR,CHIP 10K 1/10W(2012)
R4055	1-216-083-00	s	RESISTOR CHIP 27K 1/10W(2012)
R4056	1-216-073-00	s	RESISTOR,CHIP 10K 1/10W(2012)
R4057	1-216-065-91	s	RESISTOR,CHIP 4.7K 1/10W(2012)
R4058	1-216-073-00	s	RESISTOR,CHIP 10K 1/10W(2012)
R4059	1-216-053-00	s	RESISTOR CHIP 1.5K 1/10W(2012)
R4060	1-216-073-00	s	RESISTOR,CHIP 10K 1/10W(2012)
R4061	1-216-073-00	s	RESISTOR,CHIP 10K 1/10W(2012)
R4062	1-216-073-00	s	RESISTOR,CHIP 10K 1/10W(2012)
R4063	1-216-636-11	s	RESISTOR CHIP 240 1/10W (2012)
R4064	1-216-059-00	s	RESISTOR,CHIP 2.7K 1/10W(2012)
R4065	1-216-051-00	s	RESISTOR,CHIP 1.2K 1/10W(2012)
R4066	1-216-664-11	s	RESISTOR,CHIP 3.6K 1/10W(2125)

(B BOARD)

Ref. No. or Q'ty	Part No.	SP	Description
R4067	1-216-636-11	s	RESISTOR CHIP 240 1/10W (2012)
R4068	1-216-659-11	s	RESISTOR,CHIP 2.2K 1/10W(2012)
R4069	1-216-651-11	s	RESISTOR,CHIP 1K 1/10W(2012)
R4070	1-216-057-00	s	RESISTOR CHIP 2.2K 1/10W(2012)
R4071	1-216-624-11	s	RESISTOR,CHIP 75 1/10W(2012)
R4072	1-216-097-00	s	RESISTOR CHIP 100K 1/10W(2012)
R4073	1-216-025-00	s	RESISTOR,CHIP 100 1/10W(2012)
R4074	1-216-063-91	s	RESISTOR,CHIP 3.9K 1/10W(2125)
R4078	1-216-091-00	s	RESISTOR CHIP 56K 1/10W(2012)
R4079	1-216-091-00	s	RESISTOR CHIP 56K 1/10W(2012)
R4080	1-216-097-00	s	RESISTOR CHIP 100K 1/10W(2012)
R4081	1-216-091-00	s	RESISTOR CHIP 56K 1/10W(2012)
R4082	1-216-097-00	s	RESISTOR CHIP 100K 1/10W(2012)
R4083	1-216-049-11	s	RESISTOR, CHIP 1K 1/10W(2012)
R4084	1-216-049-11	s	RESISTOR, CHIP 1K 1/10W(2012)
R4085	1-216-091-00	s	RESISTOR CHIP 56K 1/10W(2012)
R4086	1-216-295-00	s	CONDUCTOR, CHIP (2012)
R4088	1-216-073-00	s	RESISTOR,CHIP 10K 1/10W(2012)
R4089	1-216-081-00	s	RESISTOR,CHIP 22K 1/10W(2012)
R4090	1-216-069-00	s	RESISTOR,CHIP 6.8K 1/10W(2012)
R4091	1-216-049-11	s	RESISTOR, CHIP 1K 1/10W(2012)
R4092	1-216-682-11	s	RESISTOR,CHIP 20K 1/10W (2012)
R4093	1-216-025-00	s	RESISTOR,CHIP 100 1/10W(2012)
R4094	1-216-089-00	s	RESISTOR CHIP 47K 1/10W(2012)
R4095	1-216-033-00	s	RESISTOR,CHIP 220 1/10W(2012)
R4096	1-216-133-00	s	RESISTOR,CHIP 3.3M 1/10W(2012)
R4097	1-216-644-11	s	RESISTOR,CHIP 510 1/10W (2012)
R4098	1-216-057-00	s	RESISTOR CHIP 2.2K 1/10W(2012)
R4099	1-216-663-11	s	RESISTOR,CHIP 3.3K 1/10W(2012)
R4100	1-216-660-11	s	RESISTOR,CHIP 2.4K 1/10W(2012)
R4101	1-216-663-11	s	RESISTOR,CHIP 3.3K 1/10W(2012)
R4102	1-216-097-00	s	RESISTOR CHIP 100K 1/10W(2012)
R4103	1-216-059-00	s	RESISTOR,CHIP 2.7K 1/10W(2012)
R4104	1-216-031-00	s	RESISTOR,CHIP 180 1/10W(2012)
R4105	1-216-057-00	s	RESISTOR CHIP 2.2K 1/10W(2012)
R4106	1-216-071-00	s	RESISTOR,CHIP 8.2K 1/10W(2012)
R4107	1-216-053-00	s	RESISTOR CHIP 1.5K 1/10W(2012)
R4109	1-216-631-11	s	RESISTOR,CHIP 150 1/10W (2012)
R4110	1-216-073-00	s	RESISTOR,CHIP 10K 1/10W(2012)
R4111	1-216-637-11	s	RESISTOR,CHIP 270 1/10W (2012)
R4112	1-216-073-00	s	RESISTOR,CHIP 10K 1/10W(2012)
R4113	1-216-631-11	s	RESISTOR,CHIP 150 1/10W (2012)
R4114	1-216-045-00	s	RESISTOR,CHIP 680 1/10W(2012)
R4115	1-216-043-91	s	RESISTOR, CHIP 560 1/10W(2125)
R4116	1-216-045-00	s	RESISTOR,CHIP 680 1/10W(2012)
R4117	1-216-045-00	s	RESISTOR,CHIP 680 1/10W(2012)
R4118	1-216-645-11	s	RESISTOR,CHIP 560 1/10W(2012)
R4119	1-216-645-11	s	RESISTOR,CHIP 560 1/10W(2012)
R4120	1-216-067-00	s	RESISTOR,CHIP 5.6K 1/10W(2012)
R4121	1-216-045-00	s	RESISTOR,CHIP 680 1/10W(2012)
R4122	1-216-045-00	s	RESISTOR,CHIP 680 1/10W(2012)
R4123	1-216-669-11	s	RESISTOR,CHIP 5.6K 1/10W(2012)
R4124	1-216-669-11	s	RESISTOR,CHIP 5.6K 1/10W(2012)
R4125	1-216-699-11	s	RESISTOR,CHIP 100K 1/10W(2012)
R4126	1-216-699-11	s	RESISTOR,CHIP 100K 1/10W(2012)
R4127	1-216-045-00	s	RESISTOR,CHIP 680 1/10W(2012)
R4128	1-216-677-11	s	RESISTOR,CHIP 12K 1/10W(2012)
R4129	1-216-677-11	s	RESISTOR,CHIP 12K 1/10W(2012)
R4130	1-216-295-00	s	CONDUCTOR, CHIP (2012)
R4131	1-216-295-00	s	CONDUCTOR, CHIP (2012)

(B BOARD)

Ref. No. or Q'ty	Part No.	SP	Description
R4132	1-216-295-00	s	CONDUCTOR, CHIP (2012)
R4133	1-216-677-11	s	RESISTOR,CHIP 12K 1/10W(2012)
R4134	1-216-677-11	s	RESISTOR,CHIP 12K 1/10W(2012)
R4135	1-216-699-11	s	RESISTOR,CHIP 100K 1/10W(2012)
R4136	1-216-699-11	s	RESISTOR,CHIP 100K 1/10W(2012)
R4137	1-216-691-11	s	RESISTOR,CHIP 47K 1/10W(2012)
R4138	1-216-679-11	s	RESISTOR,CHIP 15K 1/10W (2012)
R4139	1-216-069-00	s	RESISTOR,CHIP 6.8K 1/10W(2012)
R4140	1-216-683-11	s	RESISTOR,CHIP 22K 1/10W (2012)
R4141	1-216-069-00	s	RESISTOR,CHIP 6.8K 1/10W(2012)
R4142	1-216-677-11	s	RESISTOR,CHIP 12K 1/10W(2012)
R4143	1-216-645-11	s	RESISTOR,CHIP 560 1/10W(2012)
R4144	1-216-647-11	s	RESISTOR,CHIP 680 1/10W (2012)
R4145	1-216-673-11	s	RESISTOR,CHIP 8.2K 1/10W(2012)
R4146	1-216-049-11	s	RESISTOR, CHIP 1K 1/10W(2012)
R4147	1-216-097-00	s	RESISTOR CHIP 100K 1/10W(2012)
R4148	1-216-091-00	s	RESISTOR CHIP 56K 1/10W(2012)
R6164	1-216-627-11	s	RESISTOR,CHIP 100 1/10W (2012)
R6165	1-216-627-11	s	RESISTOR,CHIP 100 1/10W (2012)
R6201	1-216-699-11	s	RESISTOR,CHIP 100K 1/10W(2012)
R6202	1-216-693-11	s	RESISTOR CHIP 56K 1/10W (2012)
R6203	1-216-683-11	s	RESISTOR,CHIP 22K 1/10W (2012)
R6204	1-216-659-11	s	RESISTOR,CHIP 2.2K 1/10W(2012)
R6205	1-216-651-11	s	RESISTOR,CHIP 1K 1/10W(2012)
R6206	1-216-651-11	s	RESISTOR,CHIP 1K 1/10W(2012)
R6207	1-216-679-11	s	RESISTOR,CHIP 15K 1/10W (2012)
R6208	1-216-651-11	s	RESISTOR,CHIP 1K 1/10W(2012)
R6209	1-216-663-11	s	RESISTOR,CHIP 3.3K 1/10W(2012)
R6220	1-216-643-11	s	RESISTOR,CHIP 470 1/10W (2012)
R6941	1-216-081-00	s	RESISTOR,CHIP 22K 1/10W(2012)
R6942	1-216-081-00	s	RESISTOR,CHIP 22K 1/10W(2012)
R6943	1-216-121-00	s	RESISTOR CHIP 1M 1/10W(2012)
R6944	1-216-121-00	s	RESISTOR CHIP 1M 1/10W(2012)
R6945	1-216-121-00	s	RESISTOR CHIP 1M 1/10W(2012)
R6946	1-216-295-00	s	CONDUCTOR, CHIP (2012)
R6947	1-216-295-00	s	CONDUCTOR, CHIP (2012)
R6948	1-216-295-00	s	CONDUCTOR, CHIP (2012)
R6950	1-216-073-00	s	RESISTOR,CHIP 10K 1/10W(2012)
R6952	1-216-073-00	s	RESISTOR,CHIP 10K 1/10W(2012)
R6953	1-216-121-00	s	RESISTOR CHIP 1M 1/10W(2012)
R6954	1-216-121-00	s	RESISTOR CHIP 1M 1/10W(2012)
R6955	1-216-121-00	s	RESISTOR CHIP 1M 1/10W(2012)
R6956	1-216-073-00	s	RESISTOR,CHIP 10K 1/10W(2012)
R6957	1-216-073-00	s	RESISTOR,CHIP 10K 1/10W(2012)
R6971	1-216-073-00	s	RESISTOR,CHIP 10K 1/10W(2012)
R6985	1-216-025-00	s	RESISTOR,CHIP 100 1/10W(2012)
R6986	1-216-025-00	s	RESISTOR,CHIP 100 1/10W(2012)
R6987	1-216-025-00	s	RESISTOR,CHIP 100 1/10W(2012)
R6988	1-216-089-00	s	RESISTOR CHIP 47K 1/10W(2012)
R6989	1-216-113-00	s	RESISTOR CHIP 470K 1/10W(2012)
R6991	1-216-073-00	s	RESISTOR,CHIP 10K 1/10W
R6992	1-216-073-00	s	RESISTOR,CHIP 10K 1/10W
R8001	1-216-025-00	s	RESISTOR,CHIP 100 1/10W(2012)
R8002	1-216-073-00	s	RESISTOR,CHIP 10K 1/10W(2012)
R8003	1-216-097-00	s	RESISTOR CHIP 100K 1/10W(2012)
R8004	1-216-025-00	s	RESISTOR,CHIP 100 1/10W(2012)
R8005	1-216-025-00	s	RESISTOR,CHIP 100 1/10W(2012)
R8006	1-216-089-00	s	RESISTOR CHIP 47K 1/10W(2012)
R8007	1-216-001-00	s	RESISTOR, CHIP 10 1/10W(2012)
R8008	1-216-073-00	s	RESISTOR,CHIP 10K 1/10W(2012)

(B BOARD)

Ref. No. or Q'ty	Part No.	SP	Description
R9001	1-216-624-11	s	RESISTOR,CHIP 75 1/10W(2012)
R9002	1-216-624-11	s	RESISTOR,CHIP 75 1/10W(2012)
R9003	1-216-624-11	s	RESISTOR,CHIP 75 1/10W(2012)
R9004	1-216-089-00	s	RESISTOR CHIP 47K 1/10W(2012)
R9005	1-216-089-00	s	RESISTOR CHIP 47K 1/10W(2012)
R9101	1-216-624-11	s	RESISTOR,CHIP 75 1/10W(2012)
R9102	1-216-624-11	s	RESISTOR,CHIP 75 1/10W(2012)
R9103	1-216-624-11	s	RESISTOR,CHIP 75 1/10W(2012)
R9104	1-216-089-00	s	RESISTOR CHIP 47K 1/10W(2012)
R9105	1-216-089-00	s	RESISTOR CHIP 47K 1/10W(2012)
R9106	1-216-089-00	s	RESISTOR CHIP 47K 1/10W(2012)
R9107	1-216-097-00	s	RESISTOR CHIP 100K 1/10W(2012)
R9108	1-216-089-00	s	RESISTOR CHIP 47K 1/10W(2012)
R9109	1-216-097-00	s	RESISTOR CHIP 100K 1/10W(2012)
R9110	1-216-065-91	s	RESISTOR,CHIP 4.7K 1/10W(2012)
R9111	1-216-065-91	s	RESISTOR,CHIP 4.7K 1/10W(2012)
R9301	1-216-025-00	s	RESISTOR,CHIP 100 1/10W(2012)
R9302	1-216-025-00	s	RESISTOR,CHIP 100 1/10W(2012)
R9311	1-216-025-11	s	RESISTOR,CHIP 100 1/10W
RB200	1-233-576-11	s	RESISTOR,CHIP NETWORK 100
RB201	1-233-576-11	s	RESISTOR,CHIP NETWORK 100
RB202	1-233-576-11	s	RESISTOR,CHIP NETWORK 100
RB203	1-233-576-11	s	RESISTOR,CHIP NETWORK 100
RB204	1-233-576-11	s	RESISTOR,CHIP NETWORK 100
RB205	1-233-576-11	s	RESISTOR,CHIP NETWORK 100
RB206	1-233-576-11	s	RESISTOR,CHIP NETWORK 100
RB207	1-233-576-11	s	RESISTOR,CHIP NETWORK 100
RB208	1-233-576-11	s	RESISTOR,CHIP NETWORK 100
RB209	1-233-576-11	s	RESISTOR,CHIP NETWORK 100
RB210	1-233-576-11	s	RESISTOR,CHIP NETWORK 100
RB211	1-233-576-11	s	RESISTOR,CHIP NETWORK 100
RB212	1-239-409-11	s	RESISTOR NETWORK 47 (1608)
RB213	1-239-409-11	s	RESISTOR NETWORK 47 (1608)
RB214	1-239-409-11	s	RESISTOR NETWORK 47 (1608)
RB215	1-239-409-11	s	RESISTOR NETWORK 47 (1608)
RB216	1-239-409-11	s	RESISTOR NETWORK 47 (1608)
RB218	1-233-575-11	s	RES, CHIP NETWORK 22
RB219	1-239-409-11	s	RESISTOR NETWORK 47 (1608)
RB220	1-233-575-11	s	RES, CHIP NETWORK 22
RB221	1-233-575-11	s	RES, CHIP NETWORK 22
RB222	1-233-575-11	s	RES, CHIP NETWORK 22
RB223	1-233-575-11	s	RES, CHIP NETWORK 22
RB224	1-233-575-11	s	RES, CHIP NETWORK 22
RB225	1-233-575-11	s	RES, CHIP NETWORK 22
RB226	1-233-575-11	s	RES, CHIP NETWORK 22
RB227	1-233-575-11	s	RES, CHIP NETWORK 22
RB228	1-233-575-11	s	RES, CHIP NETWORK 22
RB229	1-233-575-11	s	RES, CHIP NETWORK 22
RB230	1-239-409-11	s	RESISTOR NETWORK 47 (1608)
RB236	1-233-576-11	s	RESISTOR,CHIP NETWORK 100
RB237	1-233-576-11	s	RESISTOR,CHIP NETWORK 100
RB238	1-233-576-11	s	RESISTOR,CHIP NETWORK 100
RB239	1-233-576-11	s	RESISTOR,CHIP NETWORK 100
RB240	1-233-576-11	s	RESISTOR,CHIP NETWORK 100
RB241	1-233-576-11	s	RESISTOR,CHIP NETWORK 100

(B BOARD)

Ref. No. or Q'ty	Part No.	SP	Description
RFC9	1-400-061-11	s	BEAD, FERRITE (WITH CASE)
S1	1-553-510-11	s	SWITCH, SLIDE
TH100	1-809-350-21	s	THERMISTOR
X200	1-527-722-00	s	CRYSTAL OSCILLATOR (14.31818MHz)
X500	1-579-886-11	s	VIBRATOR, CRYSTAL (32.768kHz)
X501	1-781-659-11	s	VIBRATOR, CRYSTAL (12.288MHz)
X4000	1-760-457-11	s	VIBRATOR, CRYSTAL (VCO) (17.7MHz)
X4001	1-527-722-00	s	CRYSTAL OSCILLATOR (14.31818MHz)
X4002	1-579-583-11	s	OSCILLATOR,CERAMIC (503kHz)
X4003	1-577-611-11	s	VIBRATOR,CERAMIC (500kHz)
X4004	1-767-147-11	s	VIBRATOR, CRYSTAL (FOR VCO) (14.302MHz)

B1 BOARD **(Included in B MOUNTED CIRCUIT BOARD)**

Ref. No. or Q'ty	Part No.	SP	Description
C6101	1-128-416-11	s	CAPACITOR ELECT 100MF/16V(105C
C6102	1-164-004-11	s	CAPACITOR,CERAMIC 0.1MF/25V
C6103	1-126-396-11	s	CAPACITOR,ELECT 47MF/16V(CHIP)
C6104	1-126-396-11	s	CAPACITOR,ELECT 47MF/16V(CHIP)
C6105	1-128-416-11	s	CAPACITOR ELECT 100MF/16V(105C
C6106	1-163-113-00	s	CAPACITOR,CHIP CERAMIC 68PF/50
C6107	1-126-396-11	s	CAPACITOR,ELECT 47MF/16V(CHIP)
C6108	1-126-396-11	s	CAPACITOR,ELECT 47MF/16V(CHIP)
C6109	1-126-396-11	s	CAPACITOR,ELECT 47MF/16V(CHIP)
C6110	1-126-396-11	s	CAPACITOR,ELECT 47MF/16V(CHIP)
C6111	1-164-004-11	s	CAPACITOR,CERAMIC 0.1MF/25V
C6112	1-107-781-11	s	CAPACITOR,ELECT 47MF/16V(BP)
C6113	1-164-004-11	s	CAPACITOR,CERAMIC 0.1MF/25V
C6114	1-126-396-11	s	CAPACITOR,ELECT 47MF/16V(CHIP)
C6115	1-126-396-11	s	CAPACITOR,ELECT 47MF/16V(CHIP)
C6116	1-164-004-11	s	CAPACITOR,CERAMIC 0.1MF/25V
C6117	1-107-781-11	s	CAPACITOR,ELECT 47MF/16V(BP)
C6118	1-126-396-11	s	CAPACITOR,ELECT 47MF/16V(CHIP)
C6119	1-126-396-11	s	CAPACITOR,ELECT 47MF/16V(CHIP)
C6120	1-128-416-11	s	CAPACITOR ELECT 100MF/16V(105C
C6121	1-163-113-00	s	CAPACITOR,CHIP CERAMIC 68PF/50
C6122	1-126-396-11	s	CAPACITOR,ELECT 47MF/16V(CHIP)
C6123	1-126-396-11	s	CAPACITOR,ELECT 47MF/16V(CHIP)
C6124	1-126-396-11	s	CAPACITOR,ELECT 47MF/16V(CHIP)
C6125	1-126-396-11	s	CAPACITOR,ELECT 47MF/16V(CHIP)
C6126	1-164-004-11	s	CAPACITOR,CERAMIC 0.1MF/25V
C6127	1-107-781-11	s	CAPACITOR,ELECT 47MF/16V(BP)
C6128	1-107-781-11	s	CAPACITOR,ELECT 47MF/16V(BP)
C6129	1-107-781-11	s	CAPACITOR,ELECT 47MF/16V(BP)
C6130	1-107-781-11	s	CAPACITOR,ELECT 47MF/16V(BP)
C6131	1-164-004-11	s	CAPACITOR,CERAMIC 0.1MF/25V
C6132	1-128-416-11	s	CAPACITOR ELECT 100MF/16V(105C
C6133	1-128-416-11	s	CAPACITOR ELECT 100MF/16V(105C
C6134	1-164-004-11	s	CAPACITOR,CERAMIC 0.1MF/25V
C6135	1-164-004-11	s	CAPACITOR,CERAMIC 0.1MF/25V
C6136	1-164-004-11	s	CAPACITOR,CERAMIC 0.1MF/25V
C6137	1-164-004-11	s	CAPACITOR,CERAMIC 0.1MF/25V
C6138	1-126-396-11	s	CAPACITOR,ELECT 47MF/16V(CHIP)
C6139	1-163-263-11	s	CAPACITOR CERAMIC 330PF/50V
C6140	1-164-004-11	s	CAPACITOR,CERAMIC 0.1MF/25V
C6141	1-128-416-11	s	CAPACITOR ELECT 100MF/16V(105C
C6146	1-163-253-11	s	CAPACITOR CERAMIC 120PF/50V
C6147	1-163-253-11	s	CAPACITOR CERAMIC 120PF/50V
C6148	1-163-253-11	s	CAPACITOR CERAMIC 120PF/50V
C6200	1-164-004-11	s	CAPACITOR,CERAMIC 0.1MF/25V
C6201	1-164-004-11	s	CAPACITOR,CERAMIC 0.1MF/25V
C6401	1-115-153-11	s	CAPACITOR,ELECT 4.7MF/16V(BP)
C6402	1-115-153-11	s	CAPACITOR,ELECT 4.7MF/16V(BP)
C6403	1-115-153-11	s	CAPACITOR,ELECT 4.7MF/16V(BP)
C6404	1-164-004-11	s	CAPACITOR,CERAMIC 0.1MF/25V
C6405	1-126-394-11	s	CAPACITOR,ELECT 10MF/16V(CHIP)
C6406	1-164-004-11	s	CAPACITOR,CERAMIC 0.1MF/25V
C6407	1-126-394-11	s	CAPACITOR,ELECT 10MF/16V(CHIP)
C6408	1-164-004-11	s	CAPACITOR,CERAMIC 0.1MF/25V
C6409	1-126-394-11	s	CAPACITOR,ELECT 10MF/16V(CHIP)
C6410	1-163-243-11	s	CAPACITOR CHIP CERAMIC 47PF/50
C6411	1-164-004-11	s	CAPACITOR,CERAMIC 0.1MF/25V
C6412	1-163-251-11	s	CAPACITOR CERAMIC 100PF/50V
C6413	1-164-004-11	s	CAPACITOR,CERAMIC 0.1MF/25V

(B1 BOARD)

Ref. No. or Q'ty	Part No.	SP	Description
C6414	1-164-004-11	s	CAPACITOR,CERAMIC 0.1MF/25V
C6415	1-163-251-11	s	CAPACITOR CERAMIC 100PF/50V
C6416	1-163-243-11	s	CAPACITOR CHIP CERAMIC 47PF/50
CN6101	1-815-258-11	o	CONNECTOR, BOARD TO BOARD
D6101	8-719-977-95	s	DIODE DTZ2.4B-TT11 (5MA)
D6102	8-719-977-95	s	DIODE DTZ2.4B-TT11 (5MA)
D6103	8-719-977-95	s	DIODE DTZ2.4B-TT11 (5MA)
D6104	8-719-977-95	s	DIODE DTZ2.4B-TT11 (5MA)
IC6101	8-759-360-07	s	IC BA7657F-E2
IC6102	8-759-383-61	s	IC TL026CPS(E05)
IC6103	8-759-383-61	s	IC TL026CPS(E05)
IC6104	8-759-970-89	s	IC BA10358F
IC6106	8-759-366-35	s	IC TC4W66F (TE12R)
IC6107	8-759-366-35	s	IC TC4W66F (TE12R)
IC6401	8-759-239-55	s	IC TC74HC123AF
IC6402	8-759-035-87	s	IC SC7S00F
L101	1-406-580-11	s	MICRO INDUCTOR 100UH
Q6101	8-729-120-28	s	TRANSISTOR 2SC1623-L5L6
Q6102	8-729-120-28	s	TRANSISTOR 2SC1623-L5L6
Q6103	8-729-120-28	s	TRANSISTOR 2SC1623-L5L6
Q6104	8-729-120-28	s	TRANSISTOR 2SC1623-L5L6
Q6105	8-729-120-28	s	TRANSISTOR 2SC1623-L5L6
Q6106	8-729-120-28	s	TRANSISTOR 2SC1623-L5L6
Q6107	8-729-120-28	s	TRANSISTOR 2SC1623-L5L6
Q6108	8-729-120-28	s	TRANSISTOR 2SC1623-L5L6
Q6109	8-729-120-28	s	TRANSISTOR 2SC1623-L5L6
Q6110	8-729-120-28	s	TRANSISTOR 2SC1623-L5L6
Q6111	8-729-120-28	s	TRANSISTOR 2SC1623-L5L6
Q6112	8-729-120-28	s	TRANSISTOR 2SC1623-L5L6
Q6113	8-729-120-28	s	TRANSISTOR 2SC1623-L5L6
Q6114	8-729-120-28	s	TRANSISTOR 2SC1623-L5L6
Q6200	1-801-806-11	s	TRANSISTOR DTC144EKA
Q6201	1-801-806-11	s	TRANSISTOR DTC144EKA
Q6401	8-729-120-28	s	TRANSISTOR 2SC1623-L5L6
Q6402	8-729-120-28	s	TRANSISTOR 2SC1623-L5L6
Q6403	8-729-120-28	s	TRANSISTOR 2SC1623-L5L6
Q6404	8-729-026-49	s	TRANSISTOR 2SA1037AK-T146-R
Q6405	8-729-026-49	s	TRANSISTOR 2SA1037AK-T146-R
Q6406	8-729-120-28	s	TRANSISTOR 2SC1623-L5L6
Q6407	8-729-120-28	s	TRANSISTOR 2SC1623-L5L6
Q6408	8-729-120-28	s	TRANSISTOR 2SC1623-L5L6
Q6409	8-729-026-49	s	TRANSISTOR 2SA1037AK-T146-R
Q6410	8-729-026-49	s	TRANSISTOR 2SA1037AK-T146-R
Q6411	8-729-120-28	s	TRANSISTOR 2SC1623-L5L6
Q6412	8-729-120-28	s	TRANSISTOR 2SC1623-L5L6
Q6413	8-729-120-28	s	TRANSISTOR 2SC1623-L5L6
Q6414	8-729-026-49	s	TRANSISTOR 2SA1037AK-T146-R
Q6415	8-729-026-49	s	TRANSISTOR 2SA1037AK-T146-R
Q6416	8-729-026-49	s	TRANSISTOR 2SA1037AK-T146-R
Q6417	8-729-026-49	s	TRANSISTOR 2SA1037AK-T146-R
Q6418	8-729-120-28	s	TRANSISTOR 2SC1623-L5L6
Q6419	8-729-120-28	s	TRANSISTOR 2SC1623-L5L6
Q6420	8-729-120-28	s	TRANSISTOR 2SC1623-L5L6
Q6421	8-729-120-28	s	TRANSISTOR 2SC1623-L5L6
R6101	1-216-675-11	s	RESISTOR,CHIP 10K 1/10W(2012)
R6102	1-216-669-11	s	RESISTOR,CHIP 5.6K 1/10W(2012)

(B1 BOARD)

Ref. No. or Q'ty	Part No.	SP	Description
R6103	1-216-649-11	s	RESISTOR,CHIP 820 1/10W (2012)
R6104	1-216-667-11	s	RESISTOR,CHIP 4.7K 1/10W(2012)
R6105	1-216-667-11	s	RESISTOR,CHIP 4.7K 1/10W(2012)
R6106	1-216-667-11	s	RESISTOR,CHIP 4.7K 1/10W(2012)
R6107	1-216-639-11	s	RESISTOR,CHIP 330 1/10W (2012)
R6108	1-216-667-11	s	RESISTOR,CHIP 4.7K 1/10W(2012)
R6109	1-216-667-11	s	RESISTOR,CHIP 4.7K 1/10W(2012)
R6110	1-216-639-11	s	RESISTOR,CHIP 330 1/10W (2012)
R6111	1-216-669-11	s	RESISTOR,CHIP 5.6K 1/10W(2012)
R6112	1-216-669-11	s	RESISTOR,CHIP 5.6K 1/10W(2012)
R6113	1-216-651-11	s	RESISTOR,CHIP 1K 1/10W(2012)
R6114	1-216-642-11	s	RESISTOR,CHIP 430 1/10W (2012)
R6115	1-216-627-11	s	RESISTOR,CHIP 100 1/10W (2012)
R6116	1-216-641-11	s	RESISTOR,CHIP 390 1/10W(2012)
R6117	1-216-619-11	s	RESISTOR CHIP 47 1/10W(2012)
R6118	1-216-641-11	s	RESISTOR,CHIP 390 1/10W(2012)
R6119	1-216-645-11	s	RESISTOR,CHIP 560 1/10W(2012)
R6120	1-216-643-11	s	RESISTOR,CHIP 470 1/10W (2012)
R6121	1-216-675-11	s	RESISTOR,CHIP 10K 1/10W(2012)
R6122	1-216-669-11	s	RESISTOR,CHIP 5.6K 1/10W(2012)
R6123	1-216-657-11	s	RESISTOR,CHIP 1.8K 1/10W(2012)
R6124	1-216-675-11	s	RESISTOR,CHIP 10K 1/10W(2012)
R6125	1-216-669-11	s	RESISTOR,CHIP 5.6K 1/10W(2012)
R6126	1-216-649-11	s	RESISTOR,CHIP 820 1/10W (2012)
R6127	1-216-633-11	s	RESISTOR,CHIP 180 1/10W (2012)
R6128	1-216-649-11	s	RESISTOR,CHIP 820 1/10W (2012)
R6129	1-216-619-11	s	RESISTOR CHIP 47 1/10W(2012)
R6130	1-216-641-11	s	RESISTOR,CHIP 390 1/10W(2012)
R6131	1-216-637-11	s	RESISTOR,CHIP 270 1/10W (2012)
R6132	1-216-659-11	s	RESISTOR,CHIP 2.2K 1/10W(2012)
R6133	1-216-645-11	s	RESISTOR,CHIP 560 1/10W(2012)
R6134	1-216-643-11	s	RESISTOR,CHIP 470 1/10W (2012)
R6135	1-216-675-11	s	RESISTOR,CHIP 10K 1/10W(2012)
R6136	1-216-669-11	s	RESISTOR,CHIP 5.6K 1/10W(2012)
R6137	1-216-657-11	s	RESISTOR,CHIP 1.8K 1/10W(2012)
R6138	1-216-675-11	s	RESISTOR,CHIP 10K 1/10W(2012)
R6139	1-216-669-11	s	RESISTOR,CHIP 5.6K 1/10W(2012)
R6140	1-216-649-11	s	RESISTOR,CHIP 820 1/10W (2012)
R6141	1-216-667-11	s	RESISTOR,CHIP 4.7K 1/10W(2012)
R6142	1-216-667-11	s	RESISTOR,CHIP 4.7K 1/10W(2012)
R6143	1-216-667-11	s	RESISTOR,CHIP 4.7K 1/10W(2012)
R6144	1-216-639-11	s	RESISTOR,CHIP 330 1/10W (2012)
R6145	1-216-667-11	s	RESISTOR,CHIP 4.7K 1/10W(2012)
R6146	1-216-667-11	s	RESISTOR,CHIP 4.7K 1/10W(2012)
R6147	1-216-639-11	s	RESISTOR,CHIP 330 1/10W (2012)
R6148	1-216-669-11	s	RESISTOR,CHIP 5.6K 1/10W(2012)
R6149	1-216-669-11	s	RESISTOR,CHIP 5.6K 1/10W(2012)
R6150	1-216-651-11	s	RESISTOR,CHIP 1K 1/10W(2012)
R6151	1-216-642-11	s	RESISTOR,CHIP 430 1/10W (2012)
R6152	1-216-619-11	s	RESISTOR CHIP 47 1/10W(2012)
R6153	1-216-641-11	s	RESISTOR,CHIP 390 1/10W(2012)
R6154	1-216-619-11	s	RESISTOR CHIP 47 1/10W(2012)
R6155	1-216-639-11	s	RESISTOR,CHIP 330 1/10W (2012)
R6156	1-216-645-11	s	RESISTOR,CHIP 560 1/10W(2012)
R6157	1-216-643-11	s	RESISTOR,CHIP 470 1/10W (2012)
R6158	1-216-675-11	s	RESISTOR,CHIP 10K 1/10W(2012)
R6159	1-216-669-11	s	RESISTOR,CHIP 5.6K 1/10W(2012)
R6160	1-216-657-11	s	RESISTOR,CHIP 1.8K 1/10W(2012)
R6161	1-218-776-11	s	RESISTOR CHIP 1M 1/10W (2012)

(B1 BOARD)

Ref. No. or Q'ty	Part No.	SP	Description
R6162	1-218-776-11	s	RESISTOR CHIP 1M 1/10W (2012)
R6163	1-218-776-11	s	RESISTOR CHIP 1M 1/10W (2012)
R6166	1-216-619-11	s	RESISTOR CHIP 47 1/10W(2012)
R6167	1-216-619-11	s	RESISTOR CHIP 47 1/10W(2012)
R6168	1-216-619-11	s	RESISTOR CHIP 47 1/10W(2012)
R6169	1-216-631-11	s	RESISTOR,CHIP 150 1/10W (2012)
R6170	1-216-631-11	s	RESISTOR,CHIP 150 1/10W (2012)
R6171	1-216-631-11	s	RESISTOR,CHIP 150 1/10W (2012)
R6172	1-216-675-11	s	RESISTOR,CHIP 10K 1/10W(2012)
R6173	1-216-675-11	s	RESISTOR,CHIP 10K 1/10W(2012)
R6174	1-216-681-11	s	RESISTOR,CHIP 18K 1/10W (2012)
R6175	1-216-657-11	s	RESISTOR,CHIP 1.8K 1/10W(2012)
R6176	1-216-669-11	s	RESISTOR,CHIP 5.6K 1/10W(2012)
R6177	1-216-675-11	s	RESISTOR,CHIP 10K 1/10W(2012)
R6178	1-216-675-11	s	RESISTOR,CHIP 10K 1/10W(2012)
R6179	1-216-675-11	s	RESISTOR,CHIP 10K 1/10W(2012)
R6180	1-216-677-11	s	RESISTOR,CHIP 12K 1/10W(2012)
R6181	1-216-651-11	s	RESISTOR,CHIP 1K 1/10W(2012)
R6182	1-216-619-11	s	RESISTOR CHIP 47 1/10W(2012)
R6183	1-216-629-11	s	RESISTOR,CHIP 120 1/10W (2012)
R6184	1-216-629-11	s	RESISTOR,CHIP 120 1/10W (2012)
R6185	1-216-629-11	s	RESISTOR,CHIP 120 1/10W (2012)
R6210	1-216-619-11	s	RESISTOR CHIP 47 1/10W(2012)
R6211	1-216-645-11	s	RESISTOR,CHIP 560 1/10W(2012)
R6212	1-216-073-00	s	RESISTOR,CHIP 10K 1/10W(2012)
R6213	1-216-657-11	s	RESISTOR,CHIP 1.8K 1/10W(2012)
R6214	1-216-613-11	s	RESISTOR,CHIP 27 1/10W(2012)
R6215	1-216-649-11	s	RESISTOR,CHIP 820 1/10W (2012)
R6216	1-216-653-11	s	RESISTOR,CHIP 1.2K 1/10W(2012)
R6217	1-216-671-11	s	RESISTOR,CHIP 6.8K 1/10W(2012)
R6218	1-216-073-00	s	RESISTOR,CHIP 10K 1/10W(2012)
R6219	1-216-073-00	s	RESISTOR,CHIP 10K 1/10W(2012)
R6401	1-216-025-00	s	RESISTOR,CHIP 100 1/10W(2012)
R6402	1-216-049-11	s	RESISTOR, CHIP 1K 1/10W(2012)
R6403	1-216-667-11	s	RESISTOR,CHIP 4.7K 1/10W(2012)
R6404	1-216-661-11	s	RESISTOR,CHIP 2.7K 1/10W(2012)
R6405	1-216-025-00	s	RESISTOR,CHIP 100 1/10W(2012)
R6406	1-216-049-11	s	RESISTOR, CHIP 1K 1/10W(2012)
R6407	1-216-661-11	s	RESISTOR,CHIP 2.7K 1/10W(2012)
R6408	1-216-025-00	s	RESISTOR,CHIP 100 1/10W(2012)
R6409	1-216-049-11	s	RESISTOR, CHIP 1K 1/10W(2012)
R6410	1-216-667-11	s	RESISTOR,CHIP 4.7K 1/10W(2012)
R6411	1-216-661-11	s	RESISTOR,CHIP 2.7K 1/10W(2012)
R6412	1-216-025-00	s	RESISTOR,CHIP 100 1/10W(2012)
R6413	1-216-049-11	s	RESISTOR, CHIP 1K 1/10W(2012)
R6414	1-216-655-11	s	RESISTOR,CHIP 1.5K 1/10W(2012)
R6415	1-216-661-11	s	RESISTOR,CHIP 2.7K 1/10W(2012)
R6416	1-216-025-00	s	RESISTOR,CHIP 100 1/10W(2012)
R6417	1-216-049-11	s	RESISTOR, CHIP 1K 1/10W(2012)
R6418	1-216-667-11	s	RESISTOR,CHIP 4.7K 1/10W(2012)
R6419	1-216-661-11	s	RESISTOR,CHIP 2.7K 1/10W(2012)
R6420	1-216-025-00	s	RESISTOR,CHIP 100 1/10W(2012)
R6421	1-216-049-11	s	RESISTOR, CHIP 1K 1/10W(2012)
R6422	1-216-009-00	s	RESISTOR,CHIP 22 1/10W (2012)
R6423	1-216-009-00	s	RESISTOR,CHIP 22 1/10W (2012)
R6424	1-216-009-00	s	RESISTOR,CHIP 22 1/10W (2012)
R6425	1-216-651-11	s	RESISTOR,CHIP 1K 1/10W(2012)
R6426	1-216-679-11	s	RESISTOR,CHIP 15K 1/10W (2012)
R6427	1-216-677-11	s	RESISTOR,CHIP 12K 1/10W(2012)

(B1 BOARD)

Ref. No. or Q'ty	Part No.	SP	Description
R6428	1-216-685-11	s	RESISTOR,CHIP 27K 1/10W(2012)
R6429	1-216-699-11	s	RESISTOR,CHIP 100K 1/10W(2012)
R6431	1-216-661-11	s	RESISTOR,CHIP 2.7K 1/10W(2012)
R6432	1-216-655-11	s	RESISTOR,CHIP 1.5K 1/10W(2012)
R6433	1-216-659-11	s	RESISTOR,CHIP 2.2K 1/10W(2012)
R6434	1-216-659-11	s	RESISTOR,CHIP 2.2K 1/10W(2012)
R6435	1-216-675-11	s	RESISTOR,CHIP 10K 1/10W(2012)
R6436	1-216-677-11	s	RESISTOR,CHIP 12K 1/10W(2012)

F BOARD

Ref. No. or Q'ty	Part No.	SP	Description
1pc	1-680-712-11	o	PRINTED WIRING BOARD, F
C7001	⚠1-131-955-11	s	CAP, FILM METALLIZED 1.5MF
C7002	⚠1-131-955-11	s	CAP, FILM METALLIZED 1.5MF
CN7001	1-580-843-11	s	PIN,CONNECTOR(POWER)
F7001	⚠1-576-365-11	s	FUSE (15A/250V)
L7001	⚠1-433-843-11	s	TRANSFORMER, LINE FILTER
L7002	⚠1-433-843-11	s	TRANSFORMER, LINE FILTER
R7000	⚠1-220-825-11	s	RES, (SURGE RESISTANT) 330K
SFC4	⚠1-500-051-11	s	BEAD, FERRITE (WITH CASE)
VDR7001	⚠1-801-073-31	s	VARISTOR ERZV14D471

QA BOARD

Ref. No. or Q'ty	Part No.	SP	Description
1pc	A-1270-443-A	o	MOUNTED CIRCUIT BOARD, QA
C9501	1-126-964-11	s	CAPACITOR, ELECT 10MF/50V
C9502	1-126-964-11	s	CAPACITOR, ELECT 10MF/50V
C9503	1-102-129-00	s	CAPACITOR,CERAMIC;50V/0.01MF
C9504	1-104-664-11	s	CAPACITOR, ELECT 47MF/25V
C9505	1-104-664-11	s	CAPACITOR, ELECT 47MF/25V
C9506	1-104-664-11	s	CAPACITOR, ELECT 47MF/25V
C9507	1-104-664-11	s	CAPACITOR, ELECT 47MF/25V
C9508	1-102-129-00	s	CAPACITOR,CERAMIC;50V/0.01MF
C9509	1-104-664-11	s	CAPACITOR, ELECT 47MF/25V
C9510	1-102-129-00	s	CAPACITOR,CERAMIC;50V/0.01MF
C9511	1-102-129-00	s	CAPACITOR,CERAMIC;50V/0.01MF
C9512	1-102-129-00	s	CAPACITOR,CERAMIC;50V/0.01MF
CN9501	1-815-409-11	o	CONNECTOR, PIN HEADER 44P
CN9502	1-566-849-11	s	CONNECTOR,(S) TERMINAL 4P (Y/C IN)
CN9503	1-794-872-11	o	CONNECTOR, BNC 2P (VIDEO IN/OUT)
D9501	8-719-110-17	s	DIODE RD10ES-B2
D9502	8-719-110-17	s	DIODE RD10ES-B2
D9503	8-719-110-17	s	DIODE RD10ES-B2
D9504	8-719-110-17	s	DIODE RD10ES-B2
D9505	8-719-110-17	s	DIODE RD10ES-B2
J9501	1-566-822-21	s	JACK ((AUDIO IN)
Q9501	8-729-119-78	s	TRANSISTOR 2SC2785-HFE
Q9502	8-729-119-78	s	TRANSISTOR 2SC2785-HFE
Q9503	8-729-119-78	s	TRANSISTOR 2SC2785-HFE
R9501	1-215-394-00	s	RESISTOR METAL FILM 75 1/4W
R9502	1-249-437-11	s	RESISTOR,CARBON 47K 1/4W SMALL
R9503	1-249-437-11	s	RESISTOR,CARBON 47K 1/4W SMALL
R9504	1-215-394-00	s	RESISTOR METAL FILM 75 1/4W
R9505	1-215-394-00	s	RESISTOR METAL FILM 75 1/4W
R9506	1-249-417-11	s	RESISTOR,CARBON 1K 1/4W(SMALL)
R9507	1-249-417-11	s	RESISTOR,CARBON 1K 1/4W(SMALL)
R9508	1-249-417-11	s	RESISTOR,CARBON 1K 1/4W(SMALL)
R9510	1-249-437-11	s	RESISTOR,CARBON 47K 1/4W SMALL
R9511	1-249-437-11	s	RESISTOR,CARBON 47K 1/4W SMALL
R9512	1-247-843-11	s	RESISTOR CARBON (SMALL) 3.3K
R9513	1-249-411-11	s	RES,CARBON 330 1/4W SMALL
R9514	1-249-437-11	s	RESISTOR,CARBON 47K 1/4W SMALL
R9515	1-249-437-11	s	RESISTOR,CARBON 47K 1/4W SMALL
R9516	1-247-843-11	s	RESISTOR CARBON (SMALL) 3.3K
R9517	1-249-411-11	s	RES,CARBON 330 1/4W SMALL
R9518	1-249-437-11	s	RESISTOR,CARBON 47K 1/4W SMALL
R9519	1-249-437-11	s	RESISTOR,CARBON 47K 1/4W SMALL
R9520	1-247-843-11	s	RESISTOR CARBON (SMALL) 3.3K
R9521	1-249-411-11	s	RES,CARBON 330 1/4W SMALL

S BOARD

Ref. No. or Q'ty	Part No.	SP	Description
4pcs	A-1391-080-A	o	MOUNTED CIRCUIT BOARD, S
C1501	1-126-392-11	s	CAPACITOR,CHIP ELECT100MF/6.3V
C1502	1-163-021-91	s	CAPACITOR, CERAMIC 0.01MF/50V
C1503	1-163-021-91	s	CAPACITOR, CERAMIC 0.01MF/50V
C1504	1-163-021-91	s	CAPACITOR, CERAMIC 0.01MF/50V
CN1501	1-506-482-11	s	PIN, CONNECTOR 3P
IC1501	8-759-947-34	s	IC LM35DZ
IC1502	8-759-144-72	s	IC UPC358G2-E2
R1501	1-216-627-11	s	RESISTOR,CHIP 100 1/10W (2012)
R1502	1-216-659-11	s	RESISTOR,CHIP 2.2K 1/10W(2012)
R1503	1-216-671-11	s	RESISTOR,CHIP 6.8K 1/10W(2012)
R1504	1-216-025-00	s	RESISTOR,CHIP 100 1/10W(2012)

T BOARD

Ref. No. or Q'ty	Part No.	SP	Description
1pc	A-1391-081-A	o	MOUNTED CIRCUIT BOARD, T
1pc	1-900-257-89	o	CONNECTOR ASSY, SDN 4P
CN9001	1-815-408-11	o	CONNECTOR 20P
CN9002	1-506-480-11	s	PIN,CONNECTOR 15P
CN9003	1-506-473-11	s	PIN,CONNECTOR 8P
CN9004	1-779-092-11	s	PIN, CONNECTOR (PC BOARD) 10P
CN9005	1-564-241-11	s	PIN, CONNECTOR (B4P-VH)
CN9006	1-580-838-11	o	PIN,CONNECTOR (PC BOARD) 4P
CN9007	1-815-408-11	o	CONNECTOR 20P
CN9008	1-564-596-11	o	PLUG,CONNECTOR (15P)
CN9009	1-564-510-11	o	PLUG,CONNECTOR (7P)
CN9011	1-506-599-11	o	PIN,CONNECTOR 10P
CN9012	1-564-241-11	o	PIN, CONNECTOR (B4P-VH)
CN9014	1-506-474-11	s	PIN,CONNECTOR 9P
CN9015	1-506-474-11	s	PIN,CONNECTOR 9P

YA BOARD

Ref. No. or Q'ty	Part No.	SP	Description
1pc	A-1373-841-A	o	MOUNTED CIRCUIT BOARD, YA
C8501	1-164-004-11	s	CAPACITOR,CERAMIC 0.1MF/25V
C8502	1-125-838-11	s	CAPACITOR, CERAMIC 2.2MF/6.3V
CN8501	1-506-486-11	s	PIN,CONNECTOR 7P
D8502	8-719-158-15	s	DIODE RD5.6SB
D8503	8-719-053-43	s	LED SLR-325VCT31
D8504	8-719-060-27	s	LED SLR-325MCT31
D8505	8-719-158-15	s	DIODE RD5.6SB
D8506	8-719-158-15	s	DIODE RD5.6SB
D8507	8-719-158-15	s	DIODE RD5.6SB
D8508	8-719-158-15	s	DIODE RD5.6SB
IC8501	8-748-035-08	s	IC SBX8035-H
R8501	1-216-047-91	s	RESISTOR, CHIP 820 1/10W(2125)
R8503	1-216-043-91	s	RESISTOR, CHIP 560 1/10W(2125)
R8505	1-216-017-91	s	RESISTOR, CHIP 47 1/10W(2012)
S8501	1-571-737-21	s	SWITCH,KEY BOARD (REFLOW) (POWER)

YB BOARD

Ref. No. or Q'ty	Part No.	SP	Description
1pc	A-1373-842-A	o	MOUNTED CIRCUIT BOARD, YB
CN8601	1-564-013-11	o	PIN,CONNECTOR 3P
R8601	1-216-649-11	s	RESISTOR,CHIP 820 1/10W (2012)
R8602	1-216-641-11	s	RESISTOR,CHIP 390 1/10W(2012)
R8603	1-216-635-11	s	RESISTOR,CHIP 220 1/10W (2012)
R8604	1-216-651-11	s	RESISTOR,CHIP 1K 1/10W(2012)
S8601	1-571-737-21	s	SWITCH,KEY BOARD (REFLOW) (MENU)
S8602	1-571-737-21	s	SWITCH,KEY BOARD (REFLOW) (UP)
S8603	1-571-737-21	s	SWITCH,KEY BOARD (REFLOW) (DOWN)
S8604	1-571-737-21	s	SWITCH,KEY BOARD (REFLOW) (ENTER)

	⚠1-468-447-11	SWITCHING REGULATOR (APS-132 M BOARD) **********
		HEAT SINK A ASSY
	2-434-993-21	SCREW (3X6), RS TIGHT SPRING WASHER
		<DIODE>
D101	⚠8-719-073-32	DIODE D25XB60
D102	8-719-073-56	TRIAC BT139X-600
D104	8-719-073-58	DIODE 20JL2C41A
D105	8-719-073-58	DIODE 20JL2C41A
		<TRANSISTOR>
Q100	8-729-035-65	TRANSISTOR 2SK2370(2)
Q101	8-729-035-65	TRANSISTOR 2SK2370(2)
Q102	8-729-035-65	TRANSISTOR 2SK2370(2)
		<THERMISTOR>
THP100	1-809-789-61	THERMISTOR, POSITIVE
THP101	1-809-789-51	THERMISTOR, POSITIVE
		HEAT SINK B ASSY
	2-434-993-21	SCREW (3X6), RS TIGHT SPRINGWASHER
		<TRANSISTOR>
Q502	8-729-035-65	TRANSISTOR 2SK2370(2)
Q503	8-729-035-65	TRANSISTOR 2SK2370(2)
Q702	8-729-035-65	TRANSISTOR 2SK2370(2)
Q703	8-729-035-65	TRANSISTOR 2SK2370(2)
		HEAT SINK C ASSY
	2-434-993-21	SCREW (3X6), RS TIGHT SPRINGWASHER
	2-625-794-01	RUBBER (TO-3P), INSULATING
		<DIODE>
D200	8-719-062-31	DIODE 20DL2C41A
D250	8-719-061-49	DIODE FCH20A10
D251	8-719-075-55	DIODE FCH30A06
D252	8-719-074-61	DIODE FCH30A04
		<IC>
IC251	8-759-098-24	IC PQ30RV11
IC253	8-759-098-24	IC PQ30RV11
IC254	8-759-284-06	IC PQ30RV31
		<TRANSISTOR>
Q204	8-729-047-67	TRANSISTOR 2SK3142-01
Q207	8-729-047-67	TRANSISTOR 2SK3142-01
		HEAT SINK D ASSY
	2-434-993-21	SCREW (3X6), RS TIGHT SPRINGWASHER

<TRANSISTOR>

Q105	8-729-047-46	TRANSISTOR FS7KM-16A			
Q152	8-729-039-41	TRANSISTOR FS10KM-10			
Q153	8-729-039-41	TRANSISTOR FS10KM-10			

HEAT SINK E ASSY

	2-434-993-21	SCREW (3X6), RS TIGHT SPRINGWASHER			

<DIODE>

D400	8-719-073-58	DIODE 20JL2C41A			
D401	8-719-073-58	DIODE 20JL2C41A			
D604	8-719-077-10	DIODE 20FL2C41A			

<CAPACITOR>

C100	⚠1-115-380-91	CERAMIC	100pF	10%	125V
C101	⚠1-115-380-91	CERAMIC	100pF	10%	125V
C102	⚠1-113-920-91	CERAMIC	2200pF	20%	250V
C103	⚠1-113-920-91	CERAMIC	2200pF	20%	250V
C104	⚠1-131-955-51	FILM	1.5uF	10%	275V
C105	⚠1-125-933-51	FILM	1uF	10%	275V
C107	⚠1-125-933-51	FILM	1uF	10%	275V
C108	1-163-021-91	CERAMIC CHIP	0.01uF	10%	50V
C109	1-127-822-51	FILM	1uF	10%	420V
C110	1-127-822-51	FILM	1uF	10%	420V
C111	1-127-822-51	FILM	1uF	10%	420V
C112	1-165-127-11	CERAMIC	470pF	10%	500V
C113	1-165-127-11	CERAMIC	470pF	10%	500V
C114	1-117-716-51	FILM	2.2uF	10%	420V
C115	1-131-942-11	ELECT	270uF	30%	450V
C116	1-131-942-11	ELECT	270uF	30%	450V
C117	1-113-920-11	CERAMIC	2200pF	20%	250V
C118	1-115-339-11	CERAMIC CHIP	0.1uF	10%	50V
C119	1-115-339-11	CERAMIC CHIP	0.1uF	10%	50V
C120	1-115-340-11	CERAMIC CHIP	0.22uF	10%	25V
C121	1-163-263-91	CERAMIC CHIP	330pF	5%	50V
C122	1-115-339-11	CERAMIC CHIP	0.1uF	10%	50V
C123	1-164-645-11	CERAMIC	1000pF	10%	500V
C124	1-163-275-11	CERAMIC CHIP	1000pF	5%	50V
C125	1-163-021-91	CERAMIC CHIP	0.01uF	10%	50V
C150	1-136-165-00	FILM	0.1uF	5%	50V
C151	1-163-275-11	CERAMIC CHIP	1000pF	5%	50V
C152	1-163-275-11	CERAMIC CHIP	1000pF	5%	50V
C153	1-163-275-11	CERAMIC CHIP	1000pF	5%	50V
C154	1-107-909-11	ELECT	47uF	20%	50V
C155	1-115-340-11	CERAMIC CHIP	0.22uF	10%	25V
C156	1-117-351-91	ELECT	82uF	20%	35V
C157	1-117-350-91	ELECT	56uF	20%	35V
C158	1-163-133-00	CERAMIC CHIP	470pF	5%	50V
C159	1-163-133-00	CERAMIC CHIP	470pF	5%	50V
C160	1-115-339-11	CERAMIC CHIP	0.1uF	10%	50V
C161	1-163-275-11	CERAMIC CHIP	1000pF	5%	50V
C162	1-163-275-11	CERAMIC CHIP	1000pF	5%	50V
C163	1-163-263-91	CERAMIC CHIP	330pF	5%	50V
C164	1-163-017-00	CERAMIC CHIP	4700pF	10%	50V
C165	1-117-350-91	ELECT	56uF	20%	35V
C166	1-115-339-11	CERAMIC CHIP	0.1uF	10%	50V
C167	1-127-761-11	FILM	0.0082uF	5%	1.25KV
C169	1-107-903-11	ELECT	2.2uF	20%	50V
C170	⚠1-113-924-91	CERAMIC	4700pF	20%	250V
C171	⚠1-113-924-91	CERAMIC	4700pF	20%	250V
C200	1-115-339-11	CERAMIC CHIP	0.1uF	10%	50V
C201	1-117-279-51	ELECT	3900uF	20%	10V
C202	1-117-350-91	ELECT	56uF	20%	35V
C204	1-117-279-51	ELECT	3900uF	20%	10V
C205	1-117-325-91	ELECT	330uF	20%	25V
C206	1-117-301-51	ELECT	820uF	20%	16V
C207	1-115-339-11	CERAMIC CHIP	0.1uF	10%	50V
C208	1-107-904-11	ELECT	3.3uF	20%	50V
C209	1-163-037-11	CERAMIC CHIP	0.022uF	10%	50V
C210	1-117-247-91	ELECT	820uF	20%	6.3V
C211	1-107-904-11	ELECT	3.3uF	20%	50V
C212	1-117-247-91	ELECT	820uF	20%	6.3V
C214	1-117-247-91	ELECT	820uF	20%	6.3V
C215	1-117-301-51	ELECT	820uF	20%	16V
C250	1-115-339-11	CERAMIC CHIP	0.1uF	10%	50V
C252	1-117-276-51	ELECT	1500uF	20%	10V
C253	1-117-329-51	ELECT	1500uF	20%	25V
C254	1-117-329-51	ELECT	1500uF	20%	25V
C255	1-163-021-91	CERAMIC CHIP	0.01uF	10%	50V
C256	1-117-344-51	ELECT	1000uF	20%	35V
C257	1-163-021-91	CERAMIC CHIP	0.01uF	10%	50V
C258	1-115-185-11	CERAMIC	0.033uF	10%	50V
C259	1-163-021-91	CERAMIC CHIP	0.01uF	10%	50V
C260	1-117-266-91	ELECT	470uF	20%	10V
C261	1-117-325-91	ELECT	330uF	20%	25V
C262	1-117-328-51	ELECT	820uF	20%	25V
C263	1-117-355-51	ELECT	560uF	20%	35V
C264	1-115-339-11	CERAMIC CHIP	0.1uF	10%	50V
C268	1-115-339-11	CERAMIC CHIP	0.1uF	10%	50V
C300	1-163-021-91	CERAMIC CHIP	0.01uF	10%	50V
C301	1-115-339-11	CERAMIC CHIP	0.1uF	10%	50V
C302	1-107-823-11	CERAMIC CHIP	0.47uF	10%	16V
C303	1-163-133-00	CERAMIC CHIP	470pF	5%	50V
C304	1-163-275-11	CERAMIC CHIP	1000pF	5%	50V
C305	1-163-275-11	CERAMIC CHIP	1000pF	5%	50V
C306	1-163-275-11	CERAMIC CHIP	1000pF	5%	50V
C307	1-107-909-11	ELECT	47uF	20%	50V
C308	1-115-339-11	CERAMIC CHIP	0.1uF	10%	50V
C309	1-115-339-11	CERAMIC CHIP	0.1uF	10%	50V
C310	1-107-909-11	ELECT	47uF	20%	50V
C311	1-115-339-11	CERAMIC CHIP	0.1uF	10%	50V
C312	1-104-760-11	CERAMIC CHIP	0.047uF	10%	50V
C313	1-163-143-00	CERAMIC	1200pF	5%	50V
C314	1-115-339-11	CERAMIC CHIP	0.1uF	10%	50V
C315	1-115-339-11	CERAMIC CHIP	0.1uF	10%	50V
C316	1-115-339-11	CERAMIC CHIP	0.1uF	10%	50V
C317	1-115-340-11	CERAMIC CHIP	0.22uF	10%	25V
C400	1-115-339-11	CERAMIC CHIP	0.1uF	10%	50V
C401	1-163-021-91	CERAMIC CHIP	0.01uF	10%	50V
C402	1-115-339-11	CERAMIC CHIP	0.1uF	10%	50V
C404	1-163-037-11	CERAMIC CHIP	0.022uF	10%	50V
C405	1-164-344-11	CERAMIC CHIP	0.068uF	10%	25V
C406	1-131-944-11	ELECT	470uF	20%	200V
C407	1-163-021-91	CERAMIC CHIP	0.01uF	10%	50V
C408	1-163-021-91	CERAMIC CHIP	0.01uF	10%	50V
C409	1-117-272-11	ELECT	180uF	20%	10V
C410	1-107-906-11	ELECT	10uF	20%	50V
C411	1-107-906-11	ELECT	10uF	20%	50V
C412	1-107-906-11	ELECT	10uF	20%	50V
C413	1-163-021-91	CERAMIC CHIP	0.01uF	10%	50V
C414	1-163-021-91	CERAMIC CHIP	0.01uF	10%	50V
C415	1-163-021-91	CERAMIC CHIP	0.01uF	10%	50V
C416	1-163-021-91	CERAMIC CHIP	0.01uF	10%	50V
C417	1-115-339-11	CERAMIC CHIP	0.1uF	10%	50V

C418	1-115-339-11	CERAMIC CHIP	0.1uF	10%	50V	C717	1-125-916-11	FILM	0.018uF	5%	1.25KV
C419	1-131-943-11	ELECT	1200uF	30%	200V	C718	1-115-339-11	CERAMIC CHIP	0.1uF	10%	50V
C420	1-115-339-11	CERAMIC CHIP	0.1uF	10%	50V						
C422	1-115-339-11	CERAMIC CHIP	0.1uF	10%	50V						
C423	1-115-339-11	CERAMIC CHIP	0.1uF	10%	50V		<CONNECTOR>				
C500	1-127-822-51	FILM	1uF	10%	420V	CN1	*1-691-960-11	PIN, CONNECTOR 3P			
C501	1-127-835-11	ELECT	22uF	20%	450V	CN2	*1-580-843-11	PIN, CONNECTOR (POWER)			
C502	1-136-165-00	FILM	0.1uF	5%	50V	CN4	*1-691-757-11	PIN, CONNECTOR 8P			
C503	1-163-275-11	CERAMIC CHIP	1000pF	5%	50V	CN5	*1-770-291-11	PIN, CONNECTOR 7P			
C504	1-163-275-11	CERAMIC CHIP	1000pF	5%	50V	CN6	*1-564-507-11	PLUG, CONNECTOR 4P			
C505	1-163-275-11	CERAMIC CHIP	1000pF	5%	50V	CN7	*1-564-596-11	PLUG, CONNECTOR 15P			
C506	1-107-909-11	ELECT	47uF	20%	50V	CN8	*1-564-511-11	PLUG, CONNECTOR 8P			
C507	1-163-133-00	CERAMIC CHIP	470pF	5%	50V						
C508	1-163-133-00	CERAMIC CHIP	470pF	5%	50V						
C509	1-115-339-11	CERAMIC CHIP	0.1uF	10%	50V		<DIODE>				
C510	1-115-340-11	CERAMIC CHIP	0.22uF	10%	25V	D100	⚠8-719-055-11	DIODE 05NH46			
C511	1-163-275-11	CERAMIC CHIP	1000pF	5%	50V	D103	⚠8-719-055-11	DIODE 05NH46			
C512	1-163-275-11	CERAMIC CHIP	1000pF	5%	50V	D106	8-719-988-61	DIODE 1SS355TE-17			
C513	1-115-339-11	CERAMIC CHIP	0.1uF	10%	50V	D107	8-719-056-84	DIODE UDZ-TE-17-7.5B			
C514	1-163-263-91	CERAMIC CHIP	330pF	5%	50V	D108	8-719-071-79	DIODE HZU22B2TRF			
C515	1-115-340-11	CERAMIC CHIP	0.22uF	10%	25V	D109	8-719-988-61	DIODE 1SS355TE-17			
C516	1-115-339-11	CERAMIC CHIP	0.1uF	10%	50V	D110	8-719-313-16	DIODE AU02A			
C517	1-131-924-11	FILM	0.068uF	5%	1.25KV	D111	8-719-313-16	DIODE AU02A			
C518	1-131-924-11	FILM	0.068uF	5%	1.25KV	D112	8-719-988-61	DIODE 1SS355TE-17			
C519	1-131-924-11	FILM	0.068uF	5%	1.25KV	D113	8-719-063-70	DIODE D1NL20U			
C600	1-115-339-11	CERAMIC CHIP	0.1uF	10%	50V	D114	8-719-063-70	DIODE D1NL20U			
C601	1-163-021-91	CERAMIC CHIP	0.01uF	10%	50V	D116	8-719-071-81	DIODE HZU30BTRF			
C602	1-115-339-11	CERAMIC CHIP	0.1uF	10%	50V	D150	8-719-988-61	DIODE 1SS355TE-17			
C604	1-131-945-11	ELECT	470uF	20%	100V	D151	8-719-988-61	DIODE 1SS355TE-17			
C605	1-104-760-11	CERAMIC CHIP	0.047uF	10%	50V	D152	8-719-988-61	DIODE 1SS355TE-17			
C606	1-164-344-11	CERAMIC CHIP	0.068uF	10%	25V	D153	8-719-063-70	DIODE D1NL20U			
C607	1-131-945-11	ELECT	470uF	20%	100V	D154	8-719-988-61	DIODE 1SS355TE-17			
C608	1-163-021-91	CERAMIC CHIP	0.01uF	10%	50V	D155	8-719-988-61	DIODE 1SS355TE-17			
C609	1-163-021-91	CERAMIC CHIP	0.01uF	10%	50V	D201	8-719-063-70	DIODE D1NL20U			
C610	1-107-906-11	ELECT	10uF	20%	50V	D202	8-719-063-70	DIODE D1NL20U			
C611	1-117-272-11	ELECT	180uF	20%	10V	D203	8-719-988-61	DIODE 1SS355TE-17			
C612	1-107-906-11	ELECT	10uF	20%	50V	D205	8-719-071-94	DIODE HRU0103ATRF			
C613	1-107-906-11	ELECT	10uF	20%	50V	D206	8-719-071-94	DIODE HRU0103ATRF			
C614	1-163-021-91	CERAMIC CHIP	0.01uF	10%	50V	D253	8-719-988-61	DIODE 1SS355TE-17			
C615	1-163-021-91	CERAMIC CHIP	0.01uF	10%	50V	D254	8-719-988-61	DIODE 1SS355TE-17			
C616	1-163-021-91	CERAMIC CHIP	0.01uF	10%	50V	D255	8-719-988-61	DIODE 1SS355TE-17			
C617	1-163-021-91	CERAMIC CHIP	0.01uF	10%	50V	D256	8-719-988-61	DIODE 1SS355TE-17			
C618	1-115-339-11	CERAMIC CHIP	0.1uF	10%	50V	D257	8-719-988-61	DIODE 1SS355TE-17			
C619	1-115-339-11	CERAMIC CHIP	0.1uF	10%	50V	D258	8-719-988-61	DIODE 1SS355TE-17			
C620	1-131-945-11	ELECT	470uF	20%	100V	D259	8-719-988-61	DIODE 1SS355TE-17			
C621	1-115-339-11	CERAMIC CHIP	0.1uF	10%	50V	D260	8-719-988-61	DIODE 1SS355TE-17			
C623	1-115-339-11	CERAMIC CHIP	0.1uF	10%	50V	D261	8-719-988-61	DIODE 1SS355TE-17			
C624	1-115-339-11	CERAMIC CHIP	0.1uF	10%	50V	D262	8-719-988-61	DIODE 1SS355TE-17			
C700	1-127-822-51	FILM	1uF	10%	420V	D263	8-719-988-61	DIODE 1SS355TE-17			
C701	1-127-835-11	ELECT	22uF	20%	450V	D300	8-719-056-84	DIODE UDZ-TE-17-7.5B			
C702	1-136-165-00	FILM	0.1uF	5%	50V	D301	8-719-071-94	DIODE HRU0103ATRF			
C703	1-163-275-11	CERAMIC CHIP	1000pF	5%	50V	D302	8-719-071-94	DIODE HRU0103ATRF			
C704	1-163-275-11	CERAMIC CHIP	1000pF	5%	50V	D303	8-719-056-84	DIODE UDZ-TE-17-7.5B			
C705	1-163-275-11	CERAMIC CHIP	1000pF	5%	50V	D304	8-719-071-94	DIODE HRU0103ATRF			
C706	1-107-909-11	ELECT	47uF	20%	50V	D305	8-719-988-61	DIODE 1SS355TE-17			
C707	1-163-133-00	CERAMIC CHIP	470pF	5%	50V	D306	8-719-988-61	DIODE 1SS355TE-17			
C708	1-163-133-00	CERAMIC CHIP	470pF	5%	50V	D307	8-719-988-61	DIODE 1SS355TE-17			
C709	1-115-339-11	CERAMIC CHIP	0.1uF	10%	50V	D402	8-719-071-63	DIODE HZU6.2BTRF			
C710	1-115-340-11	CERAMIC CHIP	0.22uF	10%	25V	D403	8-719-988-61	DIODE 1SS355TE-17			
C711	1-163-275-11	CERAMIC CHIP	1000pF	5%	50V	D404	8-719-988-61	DIODE 1SS355TE-17			
C712	1-163-275-11	CERAMIC CHIP	1000pF	5%	50V	D405	8-719-988-61	DIODE 1SS355TE-17			
C713	1-115-339-11	CERAMIC CHIP	0.1uF	10%	50V	D406	8-719-071-63	DIODE HZU6.2BTRF			
C714	1-163-263-91	CERAMIC CHIP	330pF	5%	50V	D407	8-719-988-61	DIODE 1SS355TE-17			
C715	1-115-340-11	CERAMIC CHIP	0.22uF	10%	25V	D408	8-719-988-61	DIODE 1SS355TE-17			
C716	1-125-916-11	FILM	0.018uF	5%	1.25KV	D409	8-719-988-61	DIODE 1SS355TE-17			

D500	8-719-988-61	DIODE 1SS355TE-17
D501	8-719-988-61	DIODE 1SS355TE-17
D502	8-719-988-61	DIODE 1SS355TE-17
D503	8-719-988-61	DIODE 1SS355TE-17
D504	8-719-988-61	DIODE 1SS355TE-17
D600	8-719-071-63	DIODE HZU6.2BTRF
D601	8-719-988-61	DIODE 1SS355TE-17
D602	8-719-988-61	DIODE 1SS355TE-17
D603	8-719-988-61	DIODE 1SS355TE-17
D605	8-719-071-63	DIODE HZU6.2BTRF
D606	8-719-988-61	DIODE 1SS355TE-17
D607	8-719-988-61	DIODE 1SS355TE-17
D608	8-719-988-61	DIODE 1SS355TE-17
D700	8-719-988-61	DIODE 1SS355TE-17
D701	8-719-988-61	DIODE 1SS355TE-17
D702	8-719-988-61	DIODE 1SS355TE-17
D703	8-719-988-61	DIODE 1SS355TE-17
D704	8-719-988-61	DIODE 1SS355TE-17

<FUSE>

F101	⚠1-576-365-11	FUSE (15A/250V)

<IC>

IC101	8-759-464-69	IC FA5317P
IC102	8-759-098-24	IC PQ30RV11
IC150	8-759-470-07	IC CXA8038AP
IC200	8-759-700-65	IC NJM79L05A
IC201	8-759-648-34	IC TA76431AS
IC203	8-759-170-73	IC TA78L12S
IC250	8-759-648-34	IC TA76431AS
IC252	8-759-648-34	IC TA76431AS
IC300	8-759-354-43	IC TK83854D
IC301	8-759-510-73	IC BA10393F-E2
IC302	8-759-648-34	IC TA76431AS
IC400	8-759-510-71	IC BA10358F-E2
IC401	8-759-648-34	IC TA76431AS
IC402	8-759-058-50	IC XRA10324AF
IC403	8-759-510-71	IC BA10358F-E2
IC500	8-759-470-07	IC CXA8038AP
IC600	8-759-510-71	IC BA10358F-E2
IC601	8-759-648-34	IC TA76431AS
IC602	8-759-058-50	IC XRA10324AF
IC603	8-759-510-71	IC BA10358F-E2
IC700	8-759-470-07	IC CXA8038AP

<COIL>

L100	1-416-489-11	COIL,CHOKE	143uH
L101	1-419-372-11	COIL,CHOKE	
L201	1-406-703-21	COIL,CHOKE	3.3uH
L202	1-406-703-21	COIL,CHOKE	3.3uH
L203	1-406-703-21	COIL,CHOKE	3.3uH
L250	1-419-394-21	COIL,CHOKE	2.2uH
L251	1-419-394-21	COIL,CHOKE	2.2uH
L252	1-416-965-21	COIL,CHOKE	1uH
L253	1-406-703-21	COIL,CHOKE	3.3uH
L254	1-406-703-21	COIL,CHOKE	3.3uH
L400	1-469-371-11	COIL, CHOKE	4.2uF
L401	1-416-616-11	COIL,CHOKE	2.2uH
L501	1-419-371-11	COIL,CHOKE	484uH
L600	1-416-616-11	COIL,CHOKE	2.2uH

<FILTER>

LF100	⚠1-423-804-11	TRANSFORMER, LINE FILTER
LF101	⚠1-433-843-11	TRANSFORMER, LINE FILTER
LF102	⚠1-433-843-11	TRANSFORMER, LINE FILTER

<PHOTO COUPLER>

PH100	8-719-062-33	PHOTO TRIAC COUPLER S21MT2F
PH101	8-749-010-64	PHOTO COUPLER PC123F2
PH102	8-749-010-64	PHOTO COUPLER PC123F2
PH103	8-749-010-64	PHOTO COUPLER PC123F2
PH104	8-749-010-64	PHOTO COUPLER PC123F2
PH105	8-749-010-64	PHOTO COUPLER PC123F2
PH500	8-749-010-64	PHOTO COUPLER PC123F2
PH501	8-749-010-64	PHOTO COUPLER PC123F2
PH502	8-749-010-64	PHOTO COUPLER PC123F2
PH700	8-749-010-64	PHOTO COUPLER PC123F2
PH701	8-749-010-64	PHOTO COUPLER PC123F2
PH702	8-749-010-64	PHOTO COUPLER PC123F2

<TRANSISTOR>

Q103	8-729-026-49	TRANSISTOR 2SA1037AK-T146-R
Q104	8-729-026-49	TRANSISTOR 2SA1037AK-T146-R
Q106	8-729-035-71	TRANSISTOR 2SJ334
Q150	8-729-141-48	TRANSISTOR 2SB624-BV345
Q151	8-729-141-48	TRANSISTOR 2SB624-BV345
Q200	8-729-120-28	TRANSISTOR 2SC1623-L5L6
Q201	8-729-900-53	TRANSISTOR DTC114EK
Q202	8-729-026-49	TRANSISTOR 2SA1037AK-T146-R
Q203	8-729-120-28	TRANSISTOR 2SC1623-L5L6
Q205	8-729-026-49	TRANSISTOR 2SA1037AK-T146-R
Q206	8-729-120-28	TRANSISTOR 2SC1623-L5L6
Q250	8-729-026-49	TRANSISTOR 2SA1037AK-T146-R
Q251	8-729-120-28	TRANSISTOR 2SC1623-L5L6
Q300	8-729-040-89	TRANSISTOR 2SK1590-T1B
Q301	8-729-026-49	TRANSISTOR 2SA1037AK-T146-R
Q302	8-729-040-88	TRANSISTOR 2SB1240TV2QR
Q303	8-729-040-23	TRANSISTOR 2SD1862TV2QR
Q304	8-729-026-49	TRANSISTOR 2SA1037AK-T146-R
Q305	8-729-040-89	TRANSISTOR 2SK1590-T1B
Q400	8-729-120-28	TRANSISTOR 2SC1623-L5L6
Q401	8-729-040-89	TRANSISTOR 2SK1590-T1B
Q402	8-729-120-28	TRANSISTOR 2SC1623-L5L6
Q403	8-729-040-89	TRANSISTOR 2SK1590-T1B
Q404	8-729-040-89	TRANSISTOR 2SK1590-T1B
Q405	8-729-040-89	TRANSISTOR 2SK1590-T1B
Q406	8-729-033-07	TRANSISTOR 2SK2425
Q500	8-729-141-48	TRANSISTOR 2SB624-BV345
Q501	8-729-141-48	TRANSISTOR 2SB624-BV345
Q600	8-729-120-28	TRANSISTOR 2SC1623-L5L6
Q601	8-729-040-89	TRANSISTOR 2SK1590-T1B
Q602	8-729-120-28	TRANSISTOR 2SC1623-L5L6
Q603	8-729-040-89	TRANSISTOR 2SK1590-T1B
Q604	8-729-040-89	TRANSISTOR 2SK1590-T1B
Q605	8-729-040-89	TRANSISTOR 2SK1590-T1B
Q606	8-729-050-53	TRANSISTOR 2SK3212-01
Q700	8-729-141-48	TRANSISTOR 2SB624-BV345
Q701	8-729-141-48	TRANSISTOR 2SB624-BV345

<RESISTOR>

R100	⚠1-260-131-81	CARBON	470K	5%	1/2W
R101	1-240-313-11	CEMENT	4.7	5%	5W
R102	1-249-397-11	CARBON	22	5%	1/4W
R103	1-240-313-11	CEMENT	4.7	5%	5W
R104	1-240-910-11	CEMENT	4.7	5%	5W
R105	1-249-407-91	CARBON	150	5%	1/4W
R106	1-219-393-11	METAL PLATE	0.05	10%	5W F
R107	1-219-393-11	METAL PLATE	0.05	10%	5W F
R109	1-215-857-11	METAL OXIDE	10	5%	1W F
R110	1-215-857-11	METAL OXIDE	10	5%	1W F
R111	1-215-857-11	METAL OXIDE	10	5%	1W F
R112	1-216-073-00	RES,CHIP	10K	5%	1/10W
R113	1-216-073-00	RES,CHIP	10K	5%	1/10W
R114	1-216-073-00	RES,CHIP	10K	5%	1/10W
R115	1-215-882-51	METAL OXIDE	22	5%	2W F
R116	1-216-081-00	RES,CHIP	22K	5%	1/10W
R117	1-216-065-91	RES,CHIP	4.7K	5%	1/10W
R118	1-216-073-00	RES,CHIP	10K	5%	1/10W
R119	1-216-065-91	RES,CHIP	4.7K	5%	1/10W
R120	1-249-413-11	CARBON	470	5%	1/4W
R121	1-216-070-00	RES,CHIP	7.5K	5%	1/10W
R122	1-216-308-00	RES,CHIP	4.7	5%	1/10W
R124	1-215-903-11	METAL OXIDE	68K	5%	2W F
R125	1-216-017-91	RES,CHIP	47	5%	1/10W
R126	1-215-903-11	METAL OXIDE	68K	5%	2W F
R127	1-215-904-11	METAL OXIDE	100K	5%	2W F
R128	1-216-037-00	RES,CHIP	330	5%	1/10W
R129	1-216-068-00	RES,CHIP	6.2K	5%	1/10W
R130	1-216-029-00	RES,CHIP	150	5%	1/10W
R131	1-216-047-00	RES,CHIP	820	5%	1/10W
R132	1-216-345-11	METAL OXIDE	0.47	5%	1W F
R133	1-216-089-91	RES,CHIP	47K		1/10W
R134	1-216-061-00	RES,CHIP	3.3K	5%	1/10W
R135	1-216-073-00	RES,CHIP	10K	5%	1/10W
R136	1-216-089-91	RES,CHIP	47K		1/10W
R137	1-216-085-00	RES,CHIP	33K	5%	1/10W
R150	1-247-807-31	CARBON	100	5%	1/4W
R151	1-249-401-11	CARBON	47	5%	1/4W
R152	1-216-081-00	RES,CHIP	22K	5%	1/10W
R153	1-216-025-00	RES,CHIP	100	5%	1/10W
R154	1-216-029-00	RES,CHIP	150	5%	1/10W
R155	1-216-065-91	RES,CHIP	4.7K	5%	1/10W
R156	1-216-065-91	RES,CHIP	4.7K	5%	1/10W
R157	1-216-065-91	RES,CHIP	4.7K	5%	1/10W
R158	1-216-065-91	RES,CHIP	4.7K	5%	1/10W
R159	1-216-073-00	RES,CHIP	10K	5%	1/10W
R160	1-216-308-00	RES,CHIP	4.7	5%	1/10W
R161	1-216-308-00	RES,CHIP	4.7	5%	1/10W
R162	1-216-081-00	RES,CHIP	22K	5%	1/10W
R163	1-216-081-00	RES,CHIP	22K	5%	1/10W
R164	1-249-429-11	CARBON	10K	5%	1/4W
R165	1-216-077-91	RES,CHIP	15K	5%	1/10W
R166	1-216-073-00	RES,CHIP	10K	5%	1/10W
R167	1-216-341-11	METAL OXIDE	0.22	5%	1W F
R190	1-247-791-91	CARBON	22	5%	1/4W
R191	1-216-089-91	RES,CHIP	47K		1/10W
R192	1-216-073-00	RES,CHIP	10K	5%	1/10W
R201	1-216-065-91	RES,CHIP	4.7K	5%	1/10W
R202	1-216-065-91	RES,CHIP	4.7K	5%	1/10W
R203	1-216-065-91	RES,CHIP	4.7K	5%	1/10W
R204	1-216-065-91	RES,CHIP	4.7K	5%	1/10W
R205	1-216-057-00	RES,CHIP	2.2K	5%	1/10W
R206	1-216-049-11	RES,CHIP	1K	5%	1/10W
R207	1-208-798-11	RES,CHIP	4.7K	0.5%	1/10W
R208	1-208-782-11	RES,CHIP	1K	0.5%	1/10W
R209	1-208-806-11	RES,CHIP	10K	0.5%	1/10W
R210	1-216-049-11	RES,CHIP	1K	5%	1/10W
R211	1-216-073-00	RES,CHIP	10K	5%	1/10W
R212	1-216-049-11	RES,CHIP	1K	5%	1/10W
R213	1-216-073-00	RES,CHIP	10K	5%	1/10W
R214	1-216-065-91	RES,CHIP	4.7K	5%	1/10W
R215	1-216-073-00	RES,CHIP	10K	5%	1/10W
R216	1-216-073-00	RES,CHIP	10K	5%	1/10W
R218	1-208-790-11	RES,CHIP	2.2K	0.5%	1/10W
R219	1-208-782-11	RES,CHIP	1K	0.5%	1/10W
R220	1-216-049-11	RES,CHIP	1K	5%	1/10W
R221	1-216-073-00	RES,CHIP	10K	5%	1/10W
R222	1-216-049-11	RES,CHIP	1K	5%	1/10W
R223	1-216-073-00	RES,CHIP	10K	5%	1/10W
R224	1-216-065-91	RES,CHIP	4.7K	5%	1/10W
R225	1-216-073-00	RES,CHIP	10K	5%	1/10W
R250	1-216-073-00	RES,CHIP	10K	5%	1/10W
R251	1-216-065-91	RES,CHIP	4.7K	5%	1/10W
R252	1-216-071-00	RES,CHIP	8.2K	5%	1/10W
R253	1-216-049-11	RES,CHIP	1K	5%	1/10W
R254	1-216-079-00	RES,CHIP	18K	5%	1/10W
R255	1-216-079-00	RES,CHIP	18K	5%	1/10W
R256	1-216-073-00	RES,CHIP	10K	5%	1/10W
R257	1-216-049-11	RES,CHIP	1K	5%	1/10W
R258	1-216-073-00	RES,CHIP	10K	5%	1/10W
R259	1-216-113-00	RES,CHIP	470K	5%	1/10W
R260	1-216-073-00	RES,CHIP	10K	5%	1/10W
R261	1-216-049-11	RES,CHIP	1K	5%	1/10W
R262	1-208-812-11	RES,CHIP	18K	0.5%	1/10W
R263	1-208-793-11	RES,CHIP	3K	0.5%	1/10W
R264	1-208-798-11	RES,CHIP	4.7K	0.5%	1/10W
R265	1-208-765-11	RES,CHIP	200	0.5%	1/10W
R266	1-208-782-11	RES,CHIP	1K	0.5%	1/10W
R267	1-249-417-11	CARBON	1K	5%	1/4W
R268	1-208-798-11	RES,CHIP	4.7K	0.5%	1/10W
R269	1-208-769-11	RES,CHIP	300	0.5%	1/10W
R270	1-208-797-11	RES,CHIP	4.3K	0.5%	1/10W
R271	1-216-073-00	RES,CHIP	10K	5%	1/10W
R272	1-216-049-11	RES,CHIP	1K	5%	1/10W
R273	1-208-798-11	RES,CHIP	4.7K	0.5%	1/10W
R274	1-208-764-11	RES,CHIP	180	0.5%	1/10W
R275	1-208-770-11	RES,CHIP	330	0.5%	1/10W
R276	1-208-806-11	RES,CHIP	10K	0.5%	1/10W
R277	1-208-783-11	RES,CHIP	1.1K	0.5%	1/10W
R278	1-208-788-11	RES,CHIP	1.8K	0.5%	1/10W
R279	1-208-806-11	RES,CHIP	10K	0.5%	1/10W
R280	1-208-782-11	RES,CHIP	1K	0.5%	1/10W
R281	1-208-788-11	RES,CHIP	1.8K	0.5%	1/10W
R282	1-208-806-11	RES,CHIP	10K	0.5%	1/10W
R283	1-208-767-11	RES,CHIP	240	0.5%	1/10W
R284	1-208-768-11	RES,CHIP	270	0.5%	1/10W
R285	1-208-814-91	RES,CHIP	22K	0.5%	1/10W
R286	1-208-765-11	RES,CHIP	200	0.5%	1/10W
R287	1-208-792-11	RES,CHIP	2.7K	0.5%	1/10W
R288	1-216-073-00	RES,CHIP	10K	5%	1/10W
R300	1-249-413-11	CARBON	470	5%	1/4W
R301	1-249-413-11	CARBON	470	5%	1/4W
R302	1-260-130-91	CARBON	390K	5%	1/2W
R304	1-260-130-91	CARBON	390K	5%	1/2W
R305	1-216-109-00	RES,CHIP	330K	5%	1/10W

R306	1-260-130-91	CARBON	390K	5%	1/2W	R429	1-216-081-00	RES,CHIP	22K	5%	1/10W
R307	1-260-130-91	CARBON	390K	5%	1/2W	R430	1-216-073-00	RES,CHIP	10K	5%	1/10W
R309	1-216-097-91	RES,CHIP	100K	5%	1/10W	R431	1-216-081-00	RES,CHIP	22K	5%	1/10W
R310	1-216-081-00	RES,CHIP	22K	5%	1/10W	R433	1-208-830-11	RES,CHIP	100K	0.5%	1/10W
R311	1-260-130-91	CARBON	390K	5%	1/2W	R434	1-216-085-00	RES,CHIP	33K	5%	1/10W
R312	1-260-130-91	CARBON	390K	5%	1/2W	R436	1-216-073-00	RES,CHIP	10K	5%	1/10W
R313	1-216-061-00	RES,CHIP	3.3K	5%	1/10W	R437	1-216-073-00	RES,CHIP	10K	5%	1/10W
R314	1-216-052-00	RES,CHIP	1.3K	5%	1/10W	R438	1-216-049-11	RES,CHIP	1K	5%	1/10W
R315	1-216-073-00	RES,CHIP	10K	5%	1/10W	R439	1-216-073-00	RES,CHIP	10K	5%	1/10W
R316	1-216-062-00	RES,CHIP	3.6K	5%	1/10W	R441	1-214-924-00	METAL	300K	1%	1/2W
R317	1-216-121-91	RES,CHIP	1M	5%	1/10W	R442	1-214-900-00	METAL	30K	1%	1/2W
R318	1-216-081-00	RES,CHIP	22K	5%	1/10W	R443	1-208-783-11	RES,CHIP	1.1K	0.5%	1/10W
R319	1-216-105-91	RES,CHIP	220K	5%	1/10W	R444	1-208-798-11	RES,CHIP	4.7K	0.5%	1/10W
R320	1-216-065-91	RES,CHIP	4.7K	5%	1/10W	R445	1-216-073-00	RES,CHIP	10K	5%	1/10W
R321	1-249-413-11	CARBON	470	5%	1/4W	R446	1-216-049-11	RES,CHIP	1K	5%	1/10W
R322	1-216-049-11	RES,CHIP	1K	5%	1/10W	R447	1-208-805-11	RES,CHIP	9.1K	0.5%	1/10W
R323	1-216-073-00	RES,CHIP	10K	5%	1/10W	R448	1-216-655-11	METAL	1.5K	0.5%	1/10W
R324	1-249-393-11	CARBON	10	5%	1/4W	R449	1-216-073-00	RES,CHIP	10K	5%	1/10W
R325	1-216-057-00	RES,CHIP	2.2K	5%	1/10W	R450	1-216-049-11	RES,CHIP	1K	5%	1/10W
R326	1-216-101-00	RES,CHIP	150K	5%	1/10W	R451	1-242-914-11	CEMENT	100	5%	5W
R327	1-216-081-00	RES,CHIP	22K	5%	1/10W	R452	1-208-806-11	RES,CHIP	10K	0.5%	1/10W
R328	1-216-065-91	RES,CHIP	4.7K	5%	1/10W	R453	1-216-655-11	METAL	1.5K	0.5%	1/10W
R329	1-260-128-11	CARBON	270K	5%	1/2W	R454	1-208-830-11	RES,CHIP	100K	0.5%	1/10W
R339	1-260-128-11	CARBON	270K	5%	1/2W	R455	1-208-830-11	RES,CHIP	100K	0.5%	1/10W
R340	1-216-049-11	RES,CHIP	1K	5%	1/10W	R456	1-216-073-00	RES,CHIP	10K	5%	1/10W
R341	1-216-042-00	RES,CHIP	510	5%	1/10W	R457	1-208-830-11	RES,CHIP	100K	0.5%	1/10W
R342	1-216-073-00	RES,CHIP	10K	5%	1/10W	R459	1-208-802-11	RES,CHIP	6.8K	0.5%	1/10W
R343	1-216-077-91	RES,CHIP	15K	5%	1/10W	R460	1-242-916-11	CEMENT	16K	5%	5W
R344	1-214-929-00	METAL	470K	1%	1/2W	R461	1-216-113-00	RES,CHIP	470K	5%	1/10W
R345	1-214-929-00	METAL	470K	1%	1/2W	R462	1-242-916-11	CEMENT	16K	5%	5W
R346	1-208-799-11	RES,CHIP	5.1K	0.5%	1/10W	R465	1-216-389-91	METAL OXIDE	1	5%	3W
R347	1-216-037-00	RES,CHIP	330	5%	1/10W	R466	1-216-389-91	METAL OXIDE	1	5%	3W
R348	1-216-073-00	RES,CHIP	10K	5%	1/10W	R467	1-242-916-11	CEMENT	16K	5%	5W
R349	1-247-791-91	CARBON	22	5%	1/4W	R468	1-242-914-11	CEMENT	100	5%	5W
R351	1-216-065-91	RES,CHIP	4.7K	5%	1/10W	R469	1-242-914-11	CEMENT	100	5%	5W
R352	1-216-113-00	RES,CHIP	470K	5%	1/10W	R500	1-247-807-31	CARBON	100	5%	1/4W
R400	1-216-065-91	RES,CHIP	4.7K	5%	1/10W	R501	1-249-401-11	CARBON	47	5%	1/4W
R401	1-216-065-91	RES,CHIP	4.7K	5%	1/10W	R502	1-216-073-00	RES,CHIP	10K	5%	1/10W
R402	1-216-049-11	RES,CHIP	1K	5%	1/10W	R503	1-216-037-00	RES,CHIP	330	5%	1/10W
R403	1-216-081-00	RES,CHIP	22K	5%	1/10W	R504	1-208-766-11	RES,CHIP	220	0.5%	1/10W
R404	1-216-065-91	RES,CHIP	4.7K	5%	1/10W	R505	1-216-065-91	RES,CHIP	4.7K	5%	1/10W
R405	1-216-081-00	RES,CHIP	22K	5%	1/10W	R506	1-216-065-91	RES,CHIP	4.7K	5%	1/10W
R406	1-216-070-00	RES,CHIP	7.5K	5%	1/10W	R507	1-216-081-00	RES,CHIP	22K	5%	1/10W
R407	1-216-073-00	RES,CHIP	10K	5%	1/10W	R508	1-216-308-00	RES,CHIP	4.7	5%	1/10W
R408	1-216-065-91	RES,CHIP	4.7K	5%	1/10W	R509	1-216-308-00	RES,CHIP	4.7	5%	1/10W
R409	1-216-049-11	RES,CHIP	1K	5%	1/10W	R510	1-216-073-00	RES,CHIP	10K	5%	1/10W
R410	1-216-049-11	RES,CHIP	1K	5%	1/10W	R511	1-216-061-00	RES,CHIP	3.3K	5%	1/10W
R411	1-216-081-00	RES,CHIP	22K	5%	1/10W	R512	1-216-049-11	RES,CHIP	1K	5%	1/10W
R412	1-214-914-11	METAL	110K	1%	1/2W	R513	1-216-081-00	RES,CHIP	22K	5%	1/10W
R413	1-214-914-11	METAL	110K	1%	1/2W	R514	1-216-081-00	RES,CHIP	22K	5%	1/10W
R414	1-208-795-11	RES,CHIP	3.6K	0.5%	1/10W	R515	1-217-625-00	METAL PLATE	0.05	10%	2W F
R415	1-216-057-00	RES,CHIP	2.2K	5%	1/10W	R516	1-216-081-00	RES,CHIP	22K	5%	1/10W
R416	1-208-782-11	RES,CHIP	1K	0.5%	1/10W	R517	1-216-073-00	RES,CHIP	10K	5%	1/10W
R417	1-216-065-91	RES,CHIP	4.7K	5%	1/10W	R600	1-216-065-91	RES,CHIP	4.7K	5%	1/10W
R418	1-208-782-11	RES,CHIP	1K	0.5%	1/10W	R601	1-216-065-91	RES,CHIP	4.7K	5%	1/10W
R419	1-208-782-11	RES,CHIP	1K	0.5%	1/10W	R602	1-216-049-11	RES,CHIP	1K	5%	1/10W
R420	1-208-806-11	RES,CHIP	10K	0.5%	1/10W	R603	1-216-081-00	RES,CHIP	22K	5%	1/10W
R421	1-217-625-00	METAL PLATE	0.05	10%	2W F	R604	1-216-065-91	RES,CHIP	4.7K	5%	1/10W
R422	1-208-807-11	RES,CHIP	11K	0.5%	1/10W	R605	1-216-081-00	RES,CHIP	22K	5%	1/10W
R423	1-216-105-91	RES,CHIP	220K	5%	1/10W	R606	1-216-073-00	RES,CHIP	10K	5%	1/10W
R424	1-216-061-00	RES,CHIP	3.3K	5%	1/10W	R607	1-216-073-00	RES,CHIP	10K	5%	1/10W
R425	1-216-061-00	RES,CHIP	3.3K	5%	1/10W	R608	1-216-065-91	RES,CHIP	4.7K	5%	1/10W
R426	1-216-081-00	RES,CHIP	22K	5%	1/10W	R609	1-216-049-11	RES,CHIP	1K	5%	1/10W
R427	1-216-089-91	RES,CHIP	47K		1/10W	R610	1-216-049-11	RES,CHIP	1K	5%	1/10W
R428	1-216-049-11	RES,CHIP	1K	5%	1/10W	R611	1-216-081-00	RES,CHIP	22K	5%	1/10W

R612	1-215-459-00	METAL	39K	1%	1/4W
R613	1-215-457-00	METAL	33K	1%	1/4W
R614	1-208-795-11	RES,CHIP	3.6K	0.5%	1/10W
R615	1-216-057-00	RES,CHIP	2.2K	5%	1/10W
R616	1-208-782-11	RES,CHIP	1K	0.5%	1/10W
R617	1-216-065-91	RES,CHIP	4.7K	5%	1/10W
R618	1-208-782-11	RES,CHIP	1K	0.5%	1/10W
R619	1-208-782-11	RES,CHIP	1K	0.5%	1/10W
R620	1-208-806-11	RES,CHIP	10K	0.5%	1/10W
R621	1-217-625-00	METAL PLATE	0.05	10%	2W F
R622	1-208-806-11	RES,CHIP	10K	0.5%	1/10W
R623	1-216-105-91	RES,CHIP	220K	5%	1/10W
R624	1-216-061-00	RES,CHIP	3.3K	5%	1/10W
R625	1-216-061-00	RES,CHIP	3.3K	5%	1/10W
R626	1-216-081-00	RES,CHIP	22K	5%	1/10W
R627	1-216-089-91	RES,CHIP	47K		1/10W
R628	1-216-049-11	RES,CHIP	1K	5%	1/10W
R629	1-216-081-00	RES,CHIP	22K	5%	1/10W
R630	1-216-073-00	RES,CHIP	10K	5%	1/10W
R631	1-216-081-00	RES,CHIP	22K	5%	1/10W
R632	1-208-816-11	RES,CHIP	27K	0.5%	1/10W
R633	1-216-085-00	RES,CHIP	33K	5%	1/10W
R635	1-216-073-00	RES,CHIP	10K	5%	1/10W
R636	1-216-073-00	RES,CHIP	10K	5%	1/10W
R637	1-216-049-11	RES,CHIP	1K	5%	1/10W
R638	1-216-073-00	RES,CHIP	10K	5%	1/10W
R640	1-214-914-11	METAL	110K	1%	1/2W
R641	1-215-456-00	METAL	30K	1%	1/4W
R642	1-208-795-11	RES,CHIP	3.6K	0.5%	1/10W
R643	1-208-798-11	RES,CHIP	4.7K	0.5%	1/10W
R644	1-216-073-00	RES,CHIP	10K	5%	1/10W
R645	1-216-049-11	RES,CHIP	1K	5%	1/10W
R646	1-208-792-11	RES,CHIP	2.7K	0.5%	1/10W
R647	1-216-655-11	METAL	1.5K	0.5%	1/10W
R648	1-216-073-00	RES,CHIP	10K	5%	1/10W
R649	1-216-049-11	RES,CHIP	1K	5%	1/10W
R650	1-242-913-11	CEMENT	15	5%	5W
R651	1-208-806-11	RES,CHIP	10K	0.5%	1/10W
R652	1-216-655-11	METAL	1.5K	0.5%	1/10W
R653	1-208-832-11	RES,CHIP	120K	0.5%	1/10W
R654	1-208-832-11	RES,CHIP	120K	0.5%	1/10W
R655	1-216-073-00	RES,CHIP	10K	5%	1/10W
R658	1-208-810-11	RES,CHIP	15K	0.5%	1/10W
R659	1-242-915-11	CEMENT	2.7K	5%	5W
R660	1-216-113-00	RES,CHIP	470K	5%	1/10W
R661	1-242-915-11	CEMENT	2.7K	5%	5W
R662	1-242-913-11	CEMENT	15	5%	5W
R700	1-247-807-31	CARBON	100	5%	1/4W
R701	1-249-401-11	CARBON	47	5%	1/4W
R703	1-216-073-00	RES,CHIP	10K	5%	1/10W
R704	1-208-768-11	RES,CHIP	270	0.5%	1/10W
R705	1-208-766-11	RES,CHIP	220	0.5%	1/10W
R706	1-216-065-91	RES,CHIP	4.7K	5%	1/10W
R707	1-216-065-91	RES,CHIP	4.7K	5%	1/10W
R708	1-216-081-00	RES,CHIP	22K	5%	1/10W
R709	1-216-308-00	RES,CHIP	4.7	5%	1/10W
R710	1-216-308-00	RES,CHIP	4.7	5%	1/10W
R711	1-216-073-00	RES,CHIP	10K	5%	1/10W
R712	1-216-049-11	RES,CHIP	1K	5%	1/10W
R713	1-216-061-00	RES,CHIP	3.3K	5%	1/10W
R714	1-216-081-00	RES,CHIP	22K	5%	1/10W
R715	1-216-081-00	RES,CHIP	22K	5%	1/10W
R716	1-217-625-00	METAL PLATE	0.05	10%	2W F
R717	1-216-689-11	RES,CHIP	39K	5%	1/10W
R718	1-216-073-00	RES,CHIP	10K	5%	1/10W

<VARIABLE RESISTOR>

RV150	1-241-764-11	RES,ADJ,CERMET 10K
RV201	1-241-762-11	RES,ADJ,CERMET 2.2K
RV250	1-241-762-11	RES,ADJ,CERMET 2.2K
RV300	1-241-762-11	RES,ADJ,CERMET 2.2K
RV400	1-241-759-11	RES,ADJ,CERMET 220
RV401	1-241-762-11	RES,ADJ,CERMET 2.2K
RV402	1-241-760-11	RES,ADJ,CERMET 470
RV500	1-241-764-11	RES,ADJ,CERMET 10K
RV600	1-241-760-11	RES,ADJ,CERMET 470
RV601	1-241-762-11	RES,ADJ,CERMET 2.2K
RV602	1-241-760-11	RES,ADJ,CERMET 470
RV700	1-241-764-11	RES,ADJ,CERMET 10K

<TRANSFORMER>

T101	1-435-218-11	TRANSFORMER, CONVERTOR
T102	1-435-219-11	TRANSFORMER, CONVERTOR
T105	1-426-931-21	TRANSFORMER, DRIVE
T501	1-435-216-11	TRANSFORMER, CONVERTOR
T502	1-426-931-21	TRANSFORMER, DRIVE
T701	1-435-217-11	TRANSFORMER, CONVERTOR
T702	1-426-931-21	TRANSFORMER, DRIVE

<VARISTOR>

VDR100	⚠1-809-909-22	VARISTOR NV270D03-TB2
VDR101	⚠1-801-625-21	VARISTOR 470NR10D
VDR102	⚠1-801-625-21	VARISTOR 470NR10D
VDR103	⚠1-809-909-22	VARISTOR NV270D03-TB2

6-4. Supplied Accessories

Ref. No. or Q'ty	Part No.	SP	Description
1pc	1-476-545-11	s	REMOTE COMMANDER (RM-42B)
1pc	9-900-029-01	s	BATTERY COVER (RM-42B)
1pc	⚠ 1-534-827-14	s	CORD, POWER (10A/125V) (US/CND)
1pc	⚠ 1-590-151-11	s	CORD SET, POWER (10A/250V) (UK, Ireland, Australia, Newzealand)
1pc	⚠ 1-777-649-11	s	CORD POWER (10A/250V) (Continental Europe)
1pc	4-080-938-01	s	OPERATING, INSTRUCTIONS (JAPANESE, ENGLISH, FRENCH, GERMAN, SPANISH, ITALIAN, SIMPLIFIED CHINESE)

Section 7
Block Diagrams

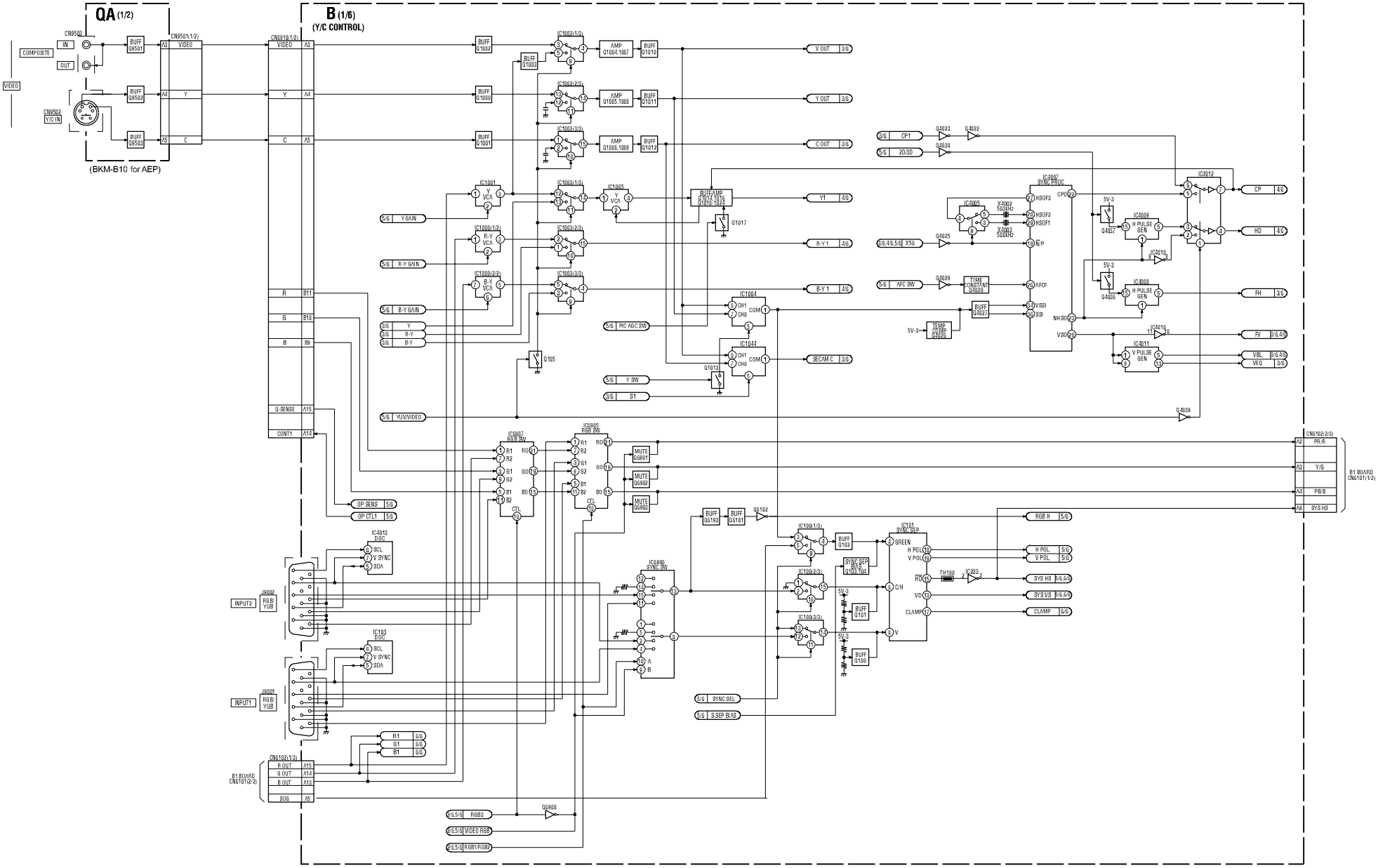

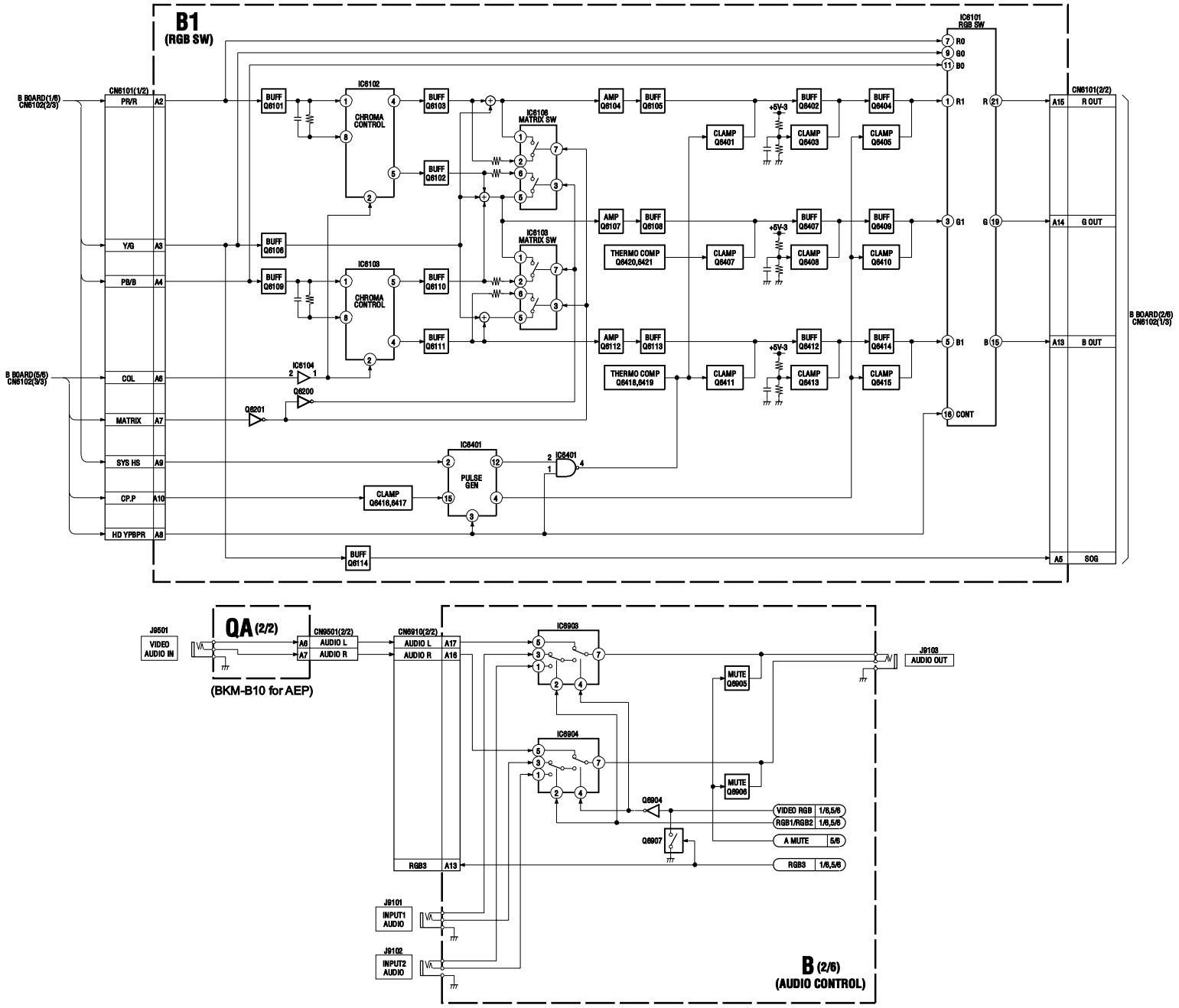
B1
(RGB SW)
IC6101
RGB SW
CN6101(1/2)
B BOARD(1/6)
CN6102(2/3)
PR/R
Y/G
PB/B
COL
MATRIX
SYS HS
CP.P
HD YPBPR
BUFF Q6101
BUFF Q6102
BUFF Q6103
BUFF Q6104
BUFF Q6105
BUFF Q6106
BUFF Q6107
BUFF Q6108
BUFF Q6109
BUFF Q6110
BUFF Q6111
BUFF Q6112
BUFF Q6113
BUFF Q6114
IC6102
CHROMA CONTROL
IC6103
CHROMA CONTROL
IC6104
IC6105
MATRIX SW
IC6106
MATRIX SW
IC6107
THERMO COMP Q6420,6421
THERMO COMP Q6418,6419
CLAMP Q6401
CLAMP Q6403
CLAMP Q6405
CLAMP Q6407
CLAMP Q6408
CLAMP Q6410
CLAMP Q6411
CLAMP Q6413
CLAMP Q6415
CLAMP Q6416,6417
+5V-3
BUFF Q6402
BUFF Q6404
BUFF Q6407
BUFF Q6409
BUFF Q6412
BUFF Q6414
Q6200
Q6201
IC6401
PULSE GEN
IC6401
R0
G0
B0
R1
G1
B1
CONT
R
G
B
CN6101(2/2)
R OUT
G OUT
B OUT
SOG
B BOARD(2/6)
CN6102(1/3)
B BOARD(5/6)
CN6102(3/3)
QA (2/2)
J9501
VIDEO AUDIO IN
CN9501(2/2)
AUDIO L
AUDIO R
(BKM-B10 for AEP)
CN6910(2/2)
AUDIO L
AUDIO R
RGB3
IC6903
IC6904
MUTE Q6905
MUTE Q6906
Q6904
Q6907
J9103
AUDIO OUT
VIDEO RGB 1/6,5/6
RGB1/RGB2 1/6,5/6
A MUTE 5/6
RGB3 1/6,5/6
J9101
INPUT1 AUDIO
J9102
INPUT2 AUDIO
B (2/6)
(AUDIO CONTROL)

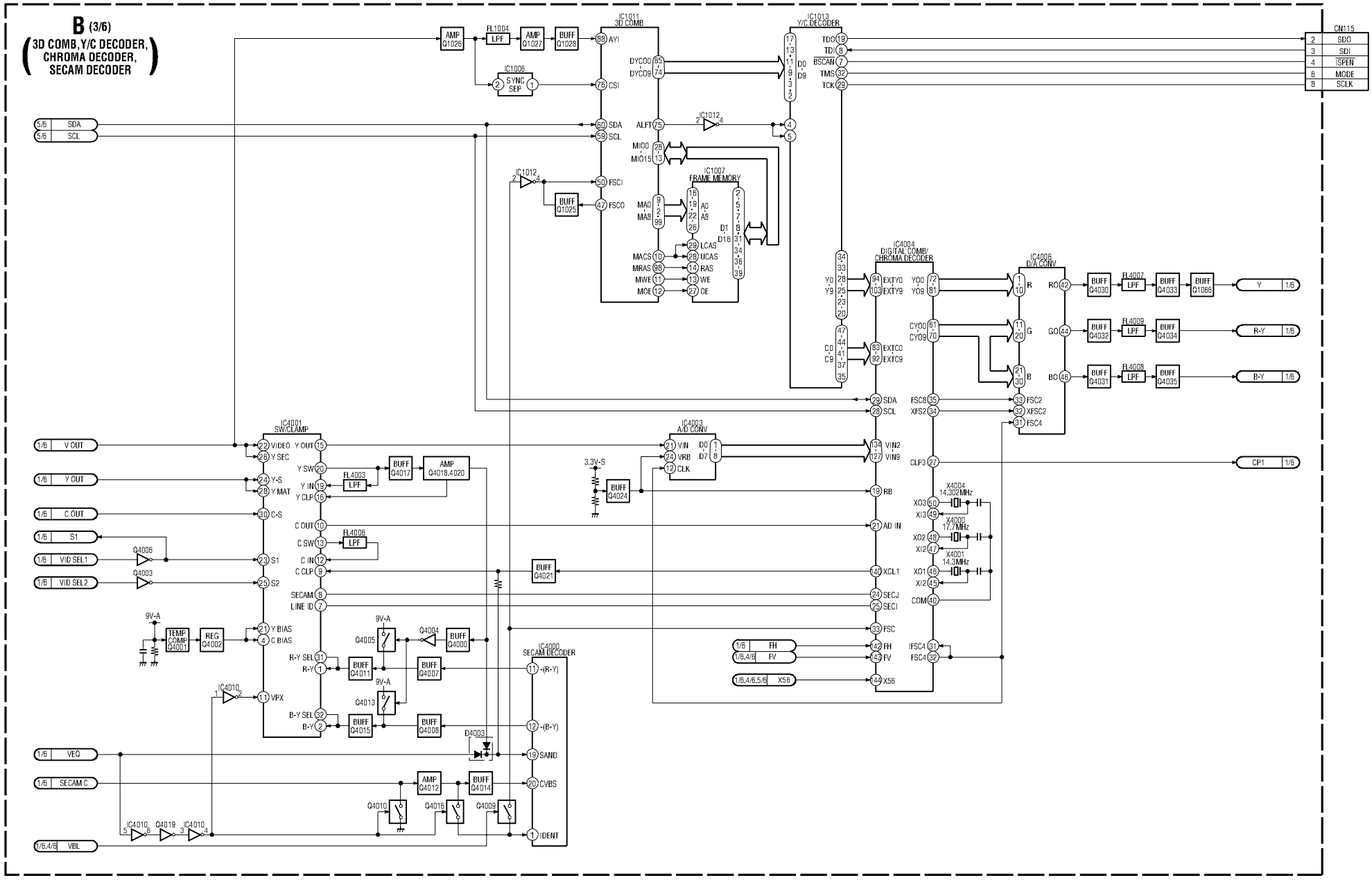
B (3/6)
3D COMB,Y/C DECODER,
CHROMA DECODER,
SECAM DECODER
IC1011
3D COMB
IC1013
Y/C DECODER
CN115
IC1007
FRAME MEMORY
IC4004
DIGITAL COMB/
CHROMA DECODER
IC4006
D/A CONV
IC4001
SW/CLAMP
IC4003
A/D CONV
IC4000
SECAM DECODER
SDA
SCL
V OUT
Y OUT
C OUT
S1
VID SEL1
VID SEL2
VEQ
SECAM C
VBL
CP1
R-Y
B-Y
X4004
14.302MHz
X4000
17.7MHz
X4001
14.3MHz

B (4/6)
(RGB MATRIX/ DRC PROCESSOR/ LVDS SWITCH)

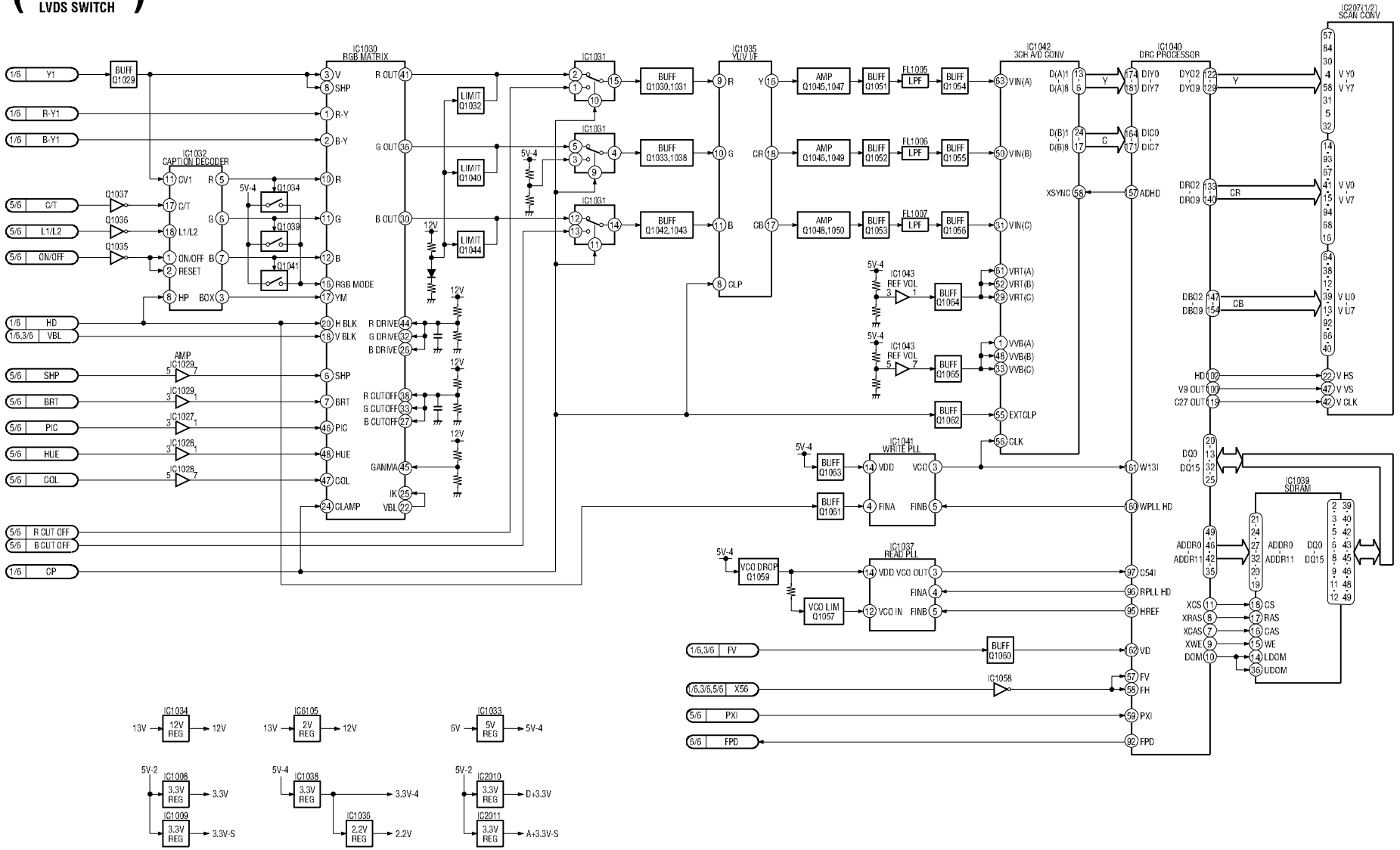

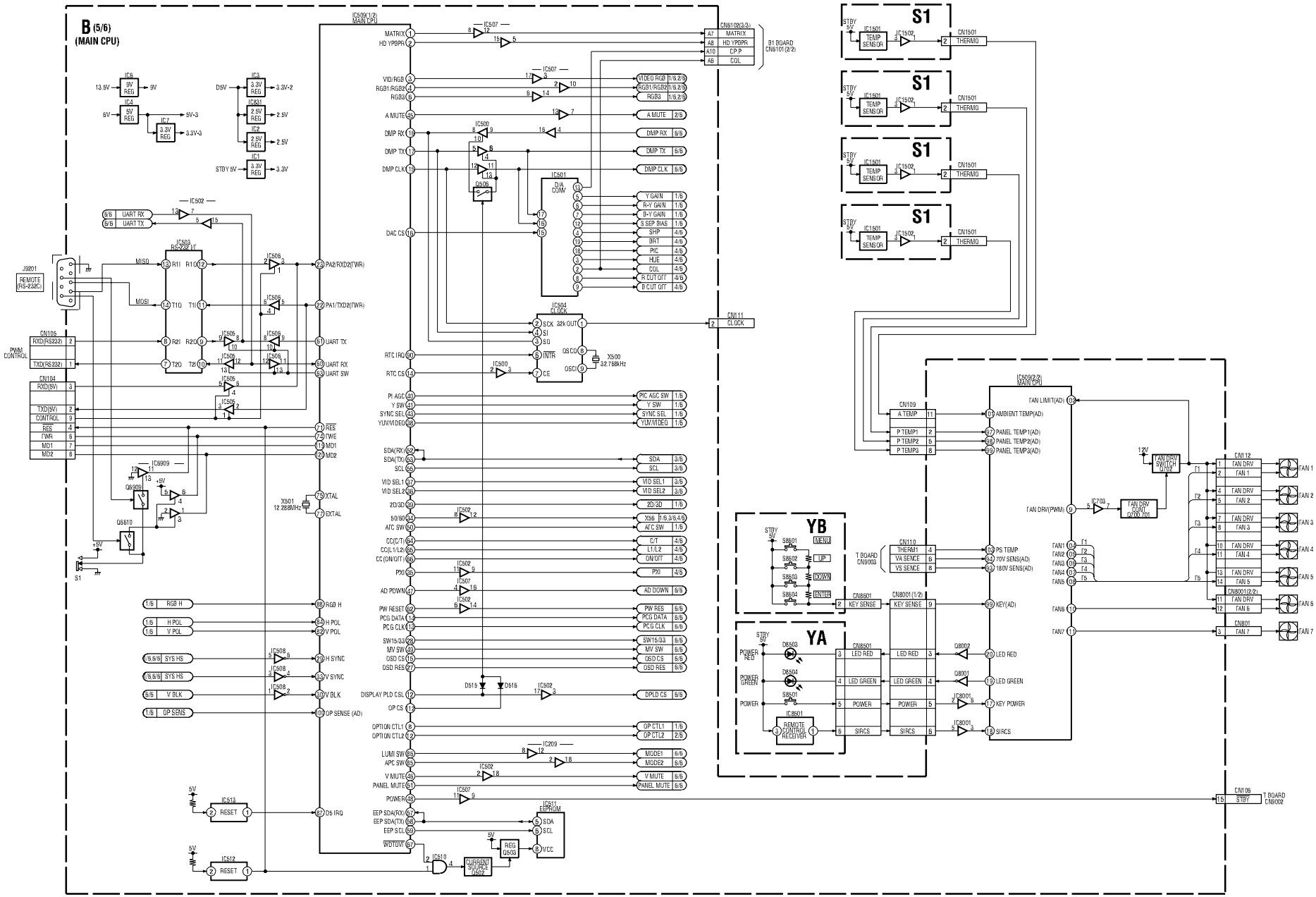
B (5/6)
(MAIN CPU)
IC509(1/2) MAIN CPU
IC6 9V REG
IC4 5V REG
IC7 3.3V REG
IC3 3.3V REG
IC831 2.5V REG
IC2 2.5V REG
IC1 3.3V REG
IC502
IC503 RS-232C I/F
IC505
IC506
IC507
IC500
IC501 D/A CONV
IC504 CLOCK
IC509
IC602
IC6909
IC513
IC512
IC511 EEPROM
IC610
IC209
IC8501
REMOTE CONTROL RECEIVER
REG Q508
CURRENT SOURCE Q802
J9201 REMOTE (RS-232C)
CN105 PWM CONTROL
CN104
XS01 12.288MHz
XS00 32.768kHz
Q6909
Q6610
D515
D516
D8503
D8504
S8501
S8601
S8602
S8603
S8604
S1
YB
YA
CN6102(3/3)
91 BOARD CN6101 (2/2)
CN111 CLOCK
CN106 T BOARD CN9002
CN1501 THERM0
CN109
CN110 T BOARD CN9003
CN8501
CN8001 (1/2)
CN8001(2/2)
CN801
CN112
IC509(2/2) MAIN CPU
IC703
FAN DRV SWITCH Q702
FAN DRV (DAV) Q700,701
FAN 1
FAN 2
FAN 3
FAN 4
FAN 5
FAN 6
FAN 7
MATRIX
HD YPBPR
VID/RGB
RGB1/RGB2
RGB3
A MUTE
DMP RX
DMP TX
DMP CLK
DAC CS
RTC IRQ
RTC CS
PI AGC
Y SW
SYNC SEL
YUV/VIDEO
SDA(RX)
SDA(TX)
SCL
VID SEL1
VID SEL2
2D/3D
50/60
ATC SW
CC(C/T)
CC(L1/L2)
CC(ON/OFT)
PXI
AD PDWN
PW RESET
PCG DATA
PCG CLK
SW15/33
MV SW
OSD CS
OSD RES
DISPLAY PLD CSL
OP CS
OPTION CTL1
OPTION CTL2
LUMI SW
APC SW
V MUTE
PANEL MUTE
POWER
EEP SDA(RX)
EEP SDA(TX)
EEP SCL
WDTOVF
UART RX
UART TX
UART SW
RES
TWE
MD1
MD2
XTAL
EXTAL
RGB H
H POL
V POL
H SYNC
V SYNC
V BLK
OP SENSE (AD)
D5 IRQ
VIDEO RGB 1/6,2/6
RGB1/RGB2 1/6,2/6
RGB3 1/6,2/6
A MUTE 2/6
DMP RX 5/6
DMP TX 5/6
DMP CLK 5/6
Y GAIN 1/6
R-Y GAIN 1/6
B-Y GAIN 1/6
G SEP BIAS 1/6
SHP 4/6
BRT 4/6
PIC 4/6
HUE 4/6
COL 4/6
R CUT OFT 4/6
B CUT OFT 4/6
PIC AGC SW 1/6
Y SW 1/6
SYNC SEL 1/6
YUV/VIDEO 1/6
SDA 3/6
SCL 3/6
VID SEL1 3/6
VID SEL2 3/6
2D/3D 1/6
XS6 1/6,3/6,4/6
ATC SW 1/6
C/T 4/6
L1/L2 4/6
ON/OFT 4/6
PXI 4/6
AD DOWN 5/6
PW RES 5/6
PCG DATA 5/6
PCG CLK 5/6
SW15/33 5/6
MV SW 5/6
OSD CS 5/6
OSD RES 5/6
DPLD CS 5/6
OP CTL1 1/6
OP CTL2 2/6
MODE1 5/6
MODE2 5/6
V MUTE 5/6
PANEL MUTE 5/6
RGB H
H POL
V POL
SYS HS
SYS HS
V BLK
OP SENS
A TEMP
P TEMP1
P TEMP2
P TEMP3
AMBIENT TEMP(AD)
PANEL TEMP1(AD)
PANEL TEMP2(AD)
PANEL TEMP3(AD)
FAN LIMIT(AD)
FAN DRV(PWM)
PS TEMP
70V SENS(AD)
180V SENS(AD)
KEY(AD)
LED RED
LED GREEN
POWER
SIRCS
KEY SENSE
MENU
UP
DOWN
ENTER
POWER RED
POWER GREEN
STBY 5V
1.2V

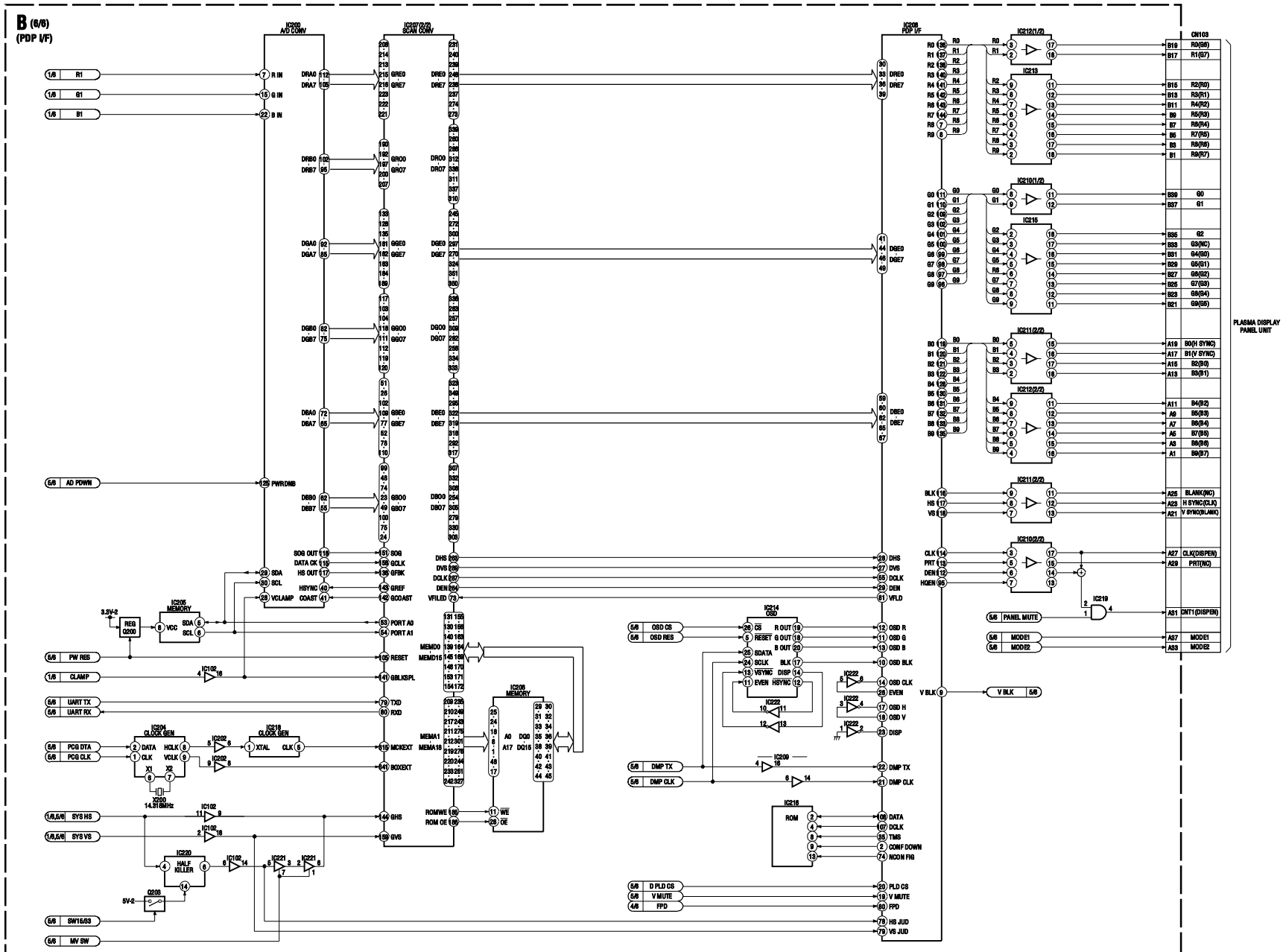
B (6/6)
(PDP I/F)
IC200 A/D CONV
IC207(2/2) SCAN CONV
IC208 PDP I/F
CN103
PLASMA DISPLAY PANEL UNIT
IC205 MEMORY
IC204 CLOCK GEN
IC218 CLOCK GEN
IC206 MEMORY
IC214 OSD
IC216 ROM
IC220 HALF KILLER
IC222
IC219
IC212(1/2)
IC213
IC210(1/2)
IC215
IC211(2/2)
IC212(2/2)
IC210(2/2)
IC102
IC202
IC221
IC209
Q200
Q203
X200 14.318MHz
3.3V-2
5V-2
R1
G1
B1
AD PDWN
PW RES
CLAMP
UART TX
UART RX
PCG DTA
PCG CLK
SYS HS
SYS VS
SW15/33
MV SW
OSD CS
OSD RES
DMP TX
DMP CLK
D PLD CS
V MUTE
FPD
PANEL MUTE
MODE1
MODE2
V BLK
CNT1(DISPEN)
CLK(DISPEN)
PRT(NC)
BLANK(NC)
H SYNC(CLK)
V SYNC(BLANK)
B0(H SYNC)
B1(V SYNC)
B2(B0)
B3(B1)
B4(B2)
B5(B3)
B6(B4)
B7(B5)
B8(B6)
B9(B7)
R0(G6)
R1(G7)
R2(R0)
R3(R1)
R4(R2)
R5(R3)
R6(R4)
R7(R5)
R8(R6)
R9(R7)
G0
G1
G2
G3(NC)
G4(G0)
G5(G1)
G6(G2)
G7(G3)
G8(G4)
G9(G5)
DATA
DCLK
TMS
CONF DOWN
NCON FIG
PLD CS
HS JUD
VS JUD

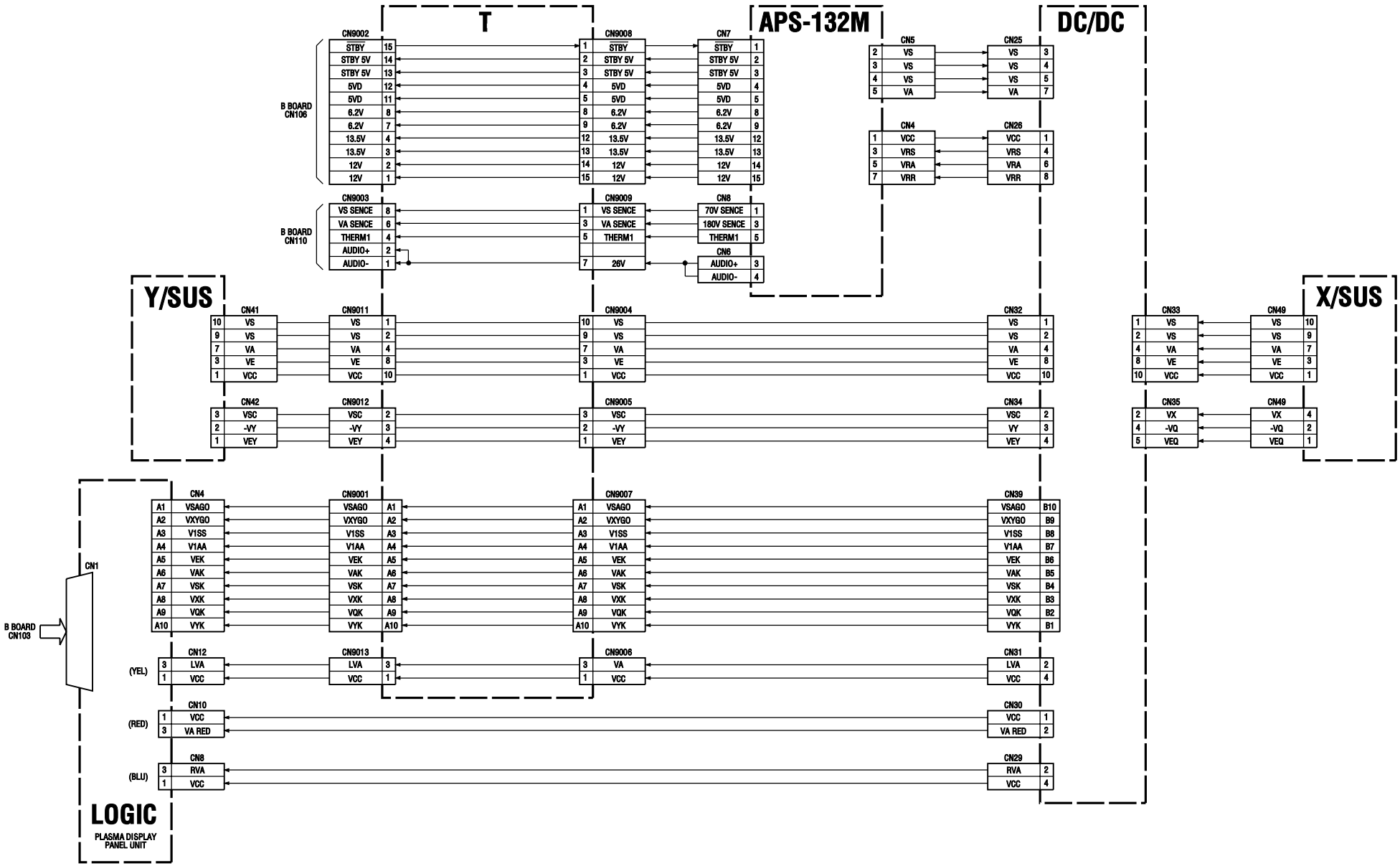
T
APS-132M
DC/DC
Y/SUS
X/SUS
LOGIC
PLASMA DISPLAY PANEL UNIT
B BOARD CN106
B BOARD CN110
B BOARD CN103
CN9002
CN9008
CN7
CN5
CN25
CN4
CN26
CN9003
CN9009
CN8
CN6
CN41
CN9011
CN9004
CN32
CN33
CN49
CN42
CN9012
CN9005
CN34
CN35
CN49
CN1
CN4
CN9001
CN9007
CN39
CN12
CN9013
CN9006
CN31
CN10
CN30
CN8
CN29
(YEL)
(RED)
(BLU)

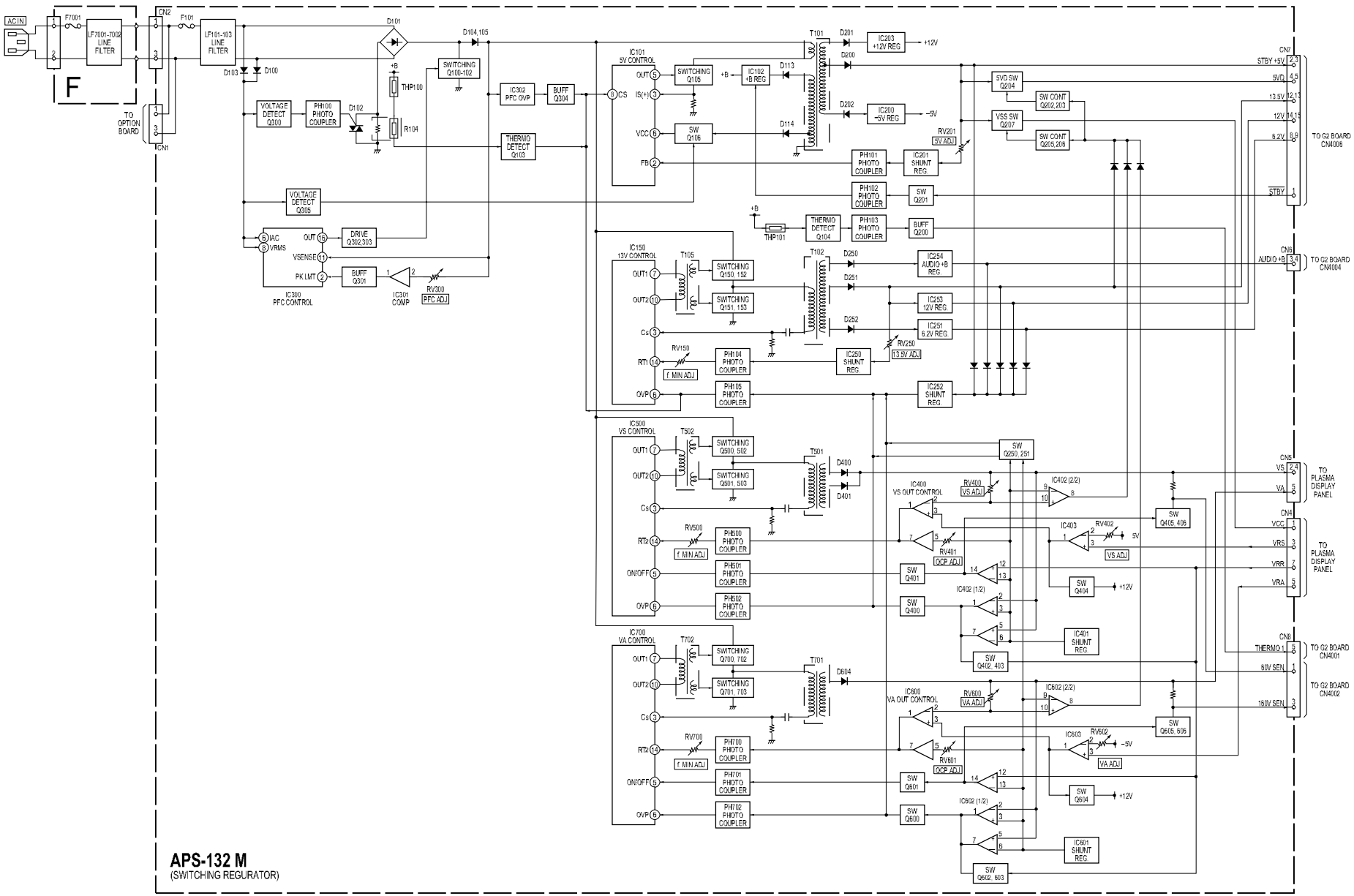
AC IN
F7001
LF7001-7002 LINE FILTER
CN2
F101
LF101-103 LINE FILTER
D101
D104,105
D103
D100
F
TO OPTION BOARD
CN1
VOLTAGE DETECT Q300
PH100 PHOTO COUPLER
D102
THP100
R104
SWITCHING Q100-102
IC302 PFC OVP
BUFF Q304
THERMO DETECT Q103
VOLTAGE DETECT Q305
IAC
VRMS
OUT
VSENSE
PK LMT
DRIVE Q302,303
BUFF Q301
IC300 PFC CONTROL
IC301 COMP
RV300 PFC ADJ
IC101 5V CONTROL
SWITCHING Q105
IC102 +B REG
SW Q106
T101
D200
D201
D202
D113
D114
IC203 +12V REG.
IC200 -5V REG.
RV201 5V ADJ
PH101 PHOTO COUPLER
IC201 SHUNT REG.
PH102 PHOTO COUPLER
SW Q201
5VD SW Q204
SW CONT Q202,203
VS5 SW Q207
SW CONT Q205,206
THERMO DETECT Q104
PH103 PHOTO COUPLER
BUFF Q200
THP101
IC150 13V CONTROL
SWITCHING Q150,152
SWITCHING Q151, 153
T105
T102
D250
D251
D252
IC254 AUDIO +B REG.
IC253 12V REG.
IC251 6.2V REG.
RV250 13.5V ADJ
IC250 SHUNT REG.
RV150 f. MIN ADJ
PH104 PHOTO COUPLER
PH105 PHOTO COUPLER
IC252 SHUNT REG.
IC500 VS CONTROL
SWITCHING Q500, 502
SWITCHING Q501, 503
T502
T501
D400
D401
SW Q250, 251
IC400 VS OUT CONTROL
RV400 VS ADJ
IC402 (2/2)
IC403
RV402 5V
VS ADJ
RV401 OCP ADJ
SW Q405, 406
RV500 f. MIN ADJ
PH500 PHOTO COUPLER
PH501 PHOTO COUPLER
PH502 PHOTO COUPLER
SW Q401
SW Q400
SW Q404
+12V
IC402 (1/2)
IC401 SHUNT REG.
SW Q402, 403
IC700 VA CONTROL
SWITCHING Q700, 702
SWITCHING Q701, 703
T702
T701
D604
IC600 VA OUT CONTROL
RV600 VA ADJ
IC602 (2/2)
IC603
RV602 -5V
VA ADJ
RV601 OCP ADJ
SW Q605, 606
RV700 f. MIN ADJ
PH700 PHOTO COUPLER
PH701 PHOTO COUPLER
PH702 PHOTO COUPLER
SW Q601
SW Q600
SW Q604
+12V
IC602 (1/2)
IC601 SHUNT REG.
SW Q602, 603
CN7
STBY +5V
5VD
13.5V
12V
6.2V
STBY
TO G2 BOARD CN4006
CN6
AUDIO +B
TO G2 BOARD CN4004
CN5
VS
VA
TO PLASMA DISPLAY PANEL
CN4
VCC
VRS
VRR
VRA
TO PLASMA DISPLAY PANEL
CN8
THERMO 1
60V SEN
160V SEN
TO G2 BOARD CN4001
TO G2 BOARD CN4002
APS-132 M
(SWITCHING REGURATOR)

Section 8
Diagrams

Note:
- Parts marked " * " differ according to the model/destination. Refer to the mount table for each function.
- The parts marked " # " on schematic diagrams are not mounted.
- All capacitors are in μF unless otherwise noted. pF: μμF 50WV or less are not indicated except for electrolytics.
- All electrolytics are in 50 V unless otherwise specified.
- : fusible resistor
- : nonflammable resistor
- △ : internal component
- : panel designation and adjustment for repair
- Caution when replacing chip parts
  New parts must be attached after removal of the chip.
  Be careful not to heat the minus side of a tantalum capacitor, because it is easily damaged by the heat.

Reference Information

RESISTOR	RN	: METAL FILM
	RC	: SOLID
	FPRD	: NONFLAMMABLE CARBON
	FUSE	: NONFLAMMABLE FUSIBLE
	RS	: NONFLAMMABLE METAL OXIDE
	RB	: NONFLAMMABLE CEMENT
	RW	: NONFLAMMABLE WIREWOUND
	※	: ADJUSTMENT RESISTOR
COIL	LF-8L	: MICRO INDUCTOR
CAPACITOR	TA	: TANTALUM
	PS	: STYROL
	PP	: POLYPROPYLENE
	PT	: MYLAR
	MPS	: METALIZED POLYESTER
	MPP	: METALIZED POLYPROPYLENE
	ALB	: BIPOLAR
	ALT	: HIGH TEMPERATURE
	ALR	: HIGH RIPPLE

[Measuring conditions, voltage and waveform]
- A voltage value is the reference value between the measurement point and the earth, when the NTSC color bar signal, RGB color bar signal and YUV signal are received from the color bar generator (digital multi-meter used: 10 M ohms/V DC).
- Unit of voltage is V (volt).
- : B+line
- : B– line
- Voltage variations may occur due to normal production tolerances.
- No mark : RGB color bar signal.
- Circled numbers indicate the reference waveform.
- : Signal path.

The components identified marked ⚠ are critical for safety.
Replace only with the part number specified.

Les composants identifiés par la marque ⚠ sont critiques pour la sécurité.
Ne les remplacer que par une pièce portant le numéro spécifié.

8-1. Frame Schematic Diagram

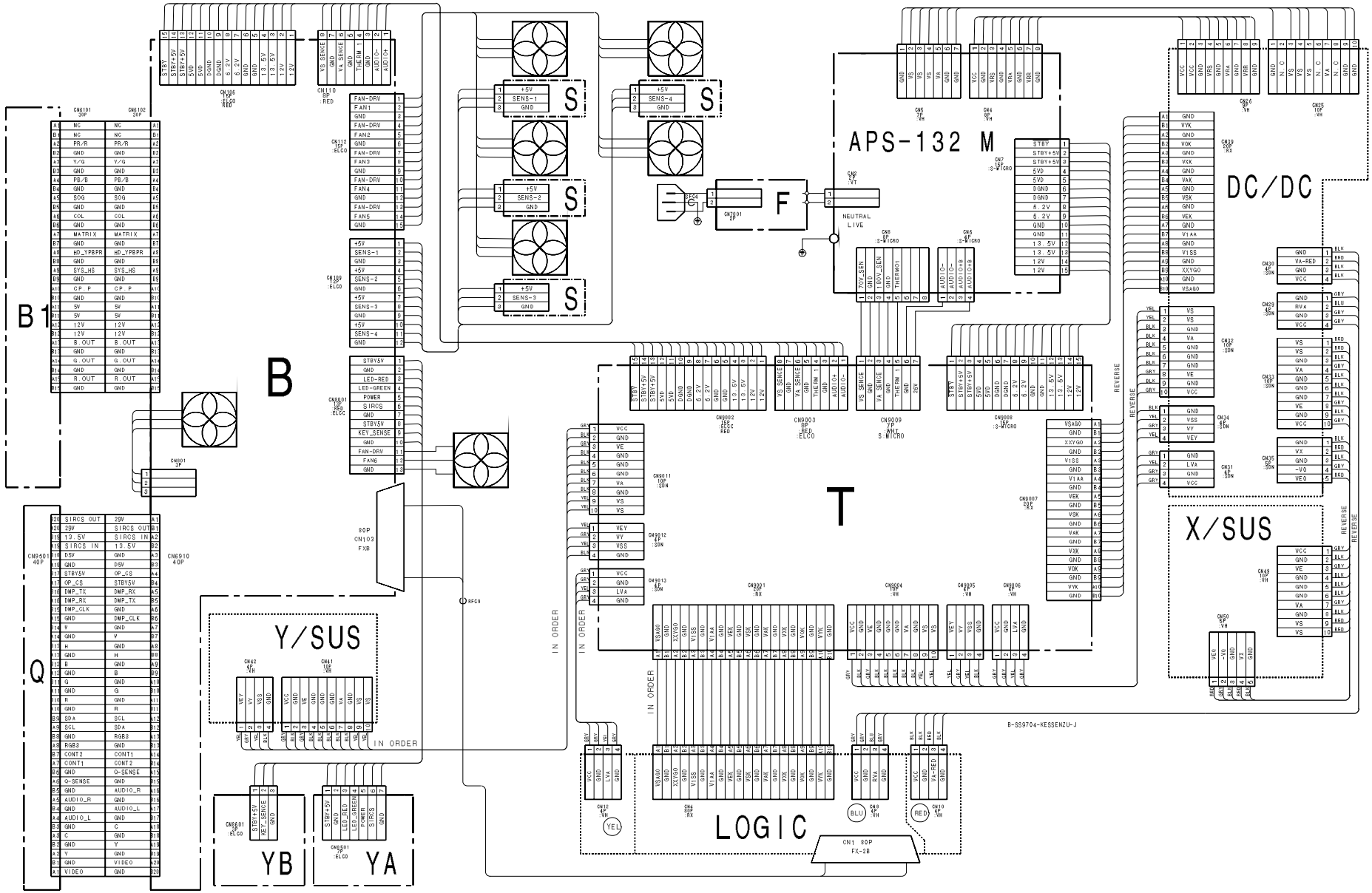

8-2. Schematic Diagrams and Printed Wiring Boards

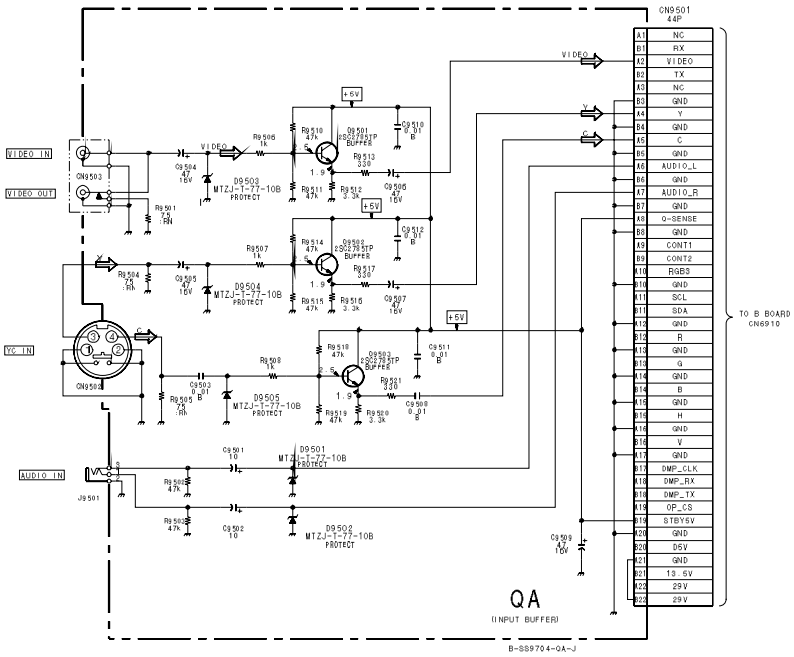

BKM-B10 is available separately for AEP model.

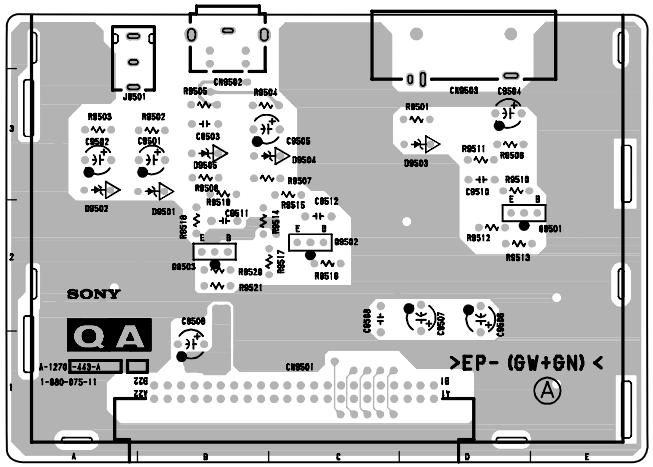

QA -A SIDE-
SUFFIX: -11

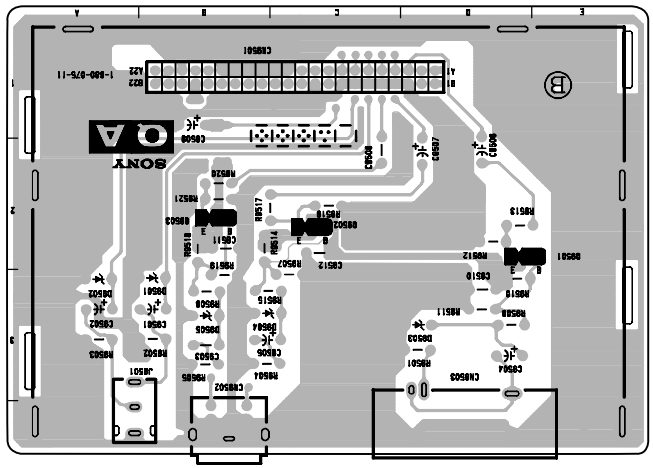

QA -B SIDE-
SUFFIX: -11

QA BOARD

D9501	B-3
D9502	A-3
D9503	D-3
D9504	C-3
D9505	B-3
Q9501	E-2
Q9502	C-2
Q9503	B-2

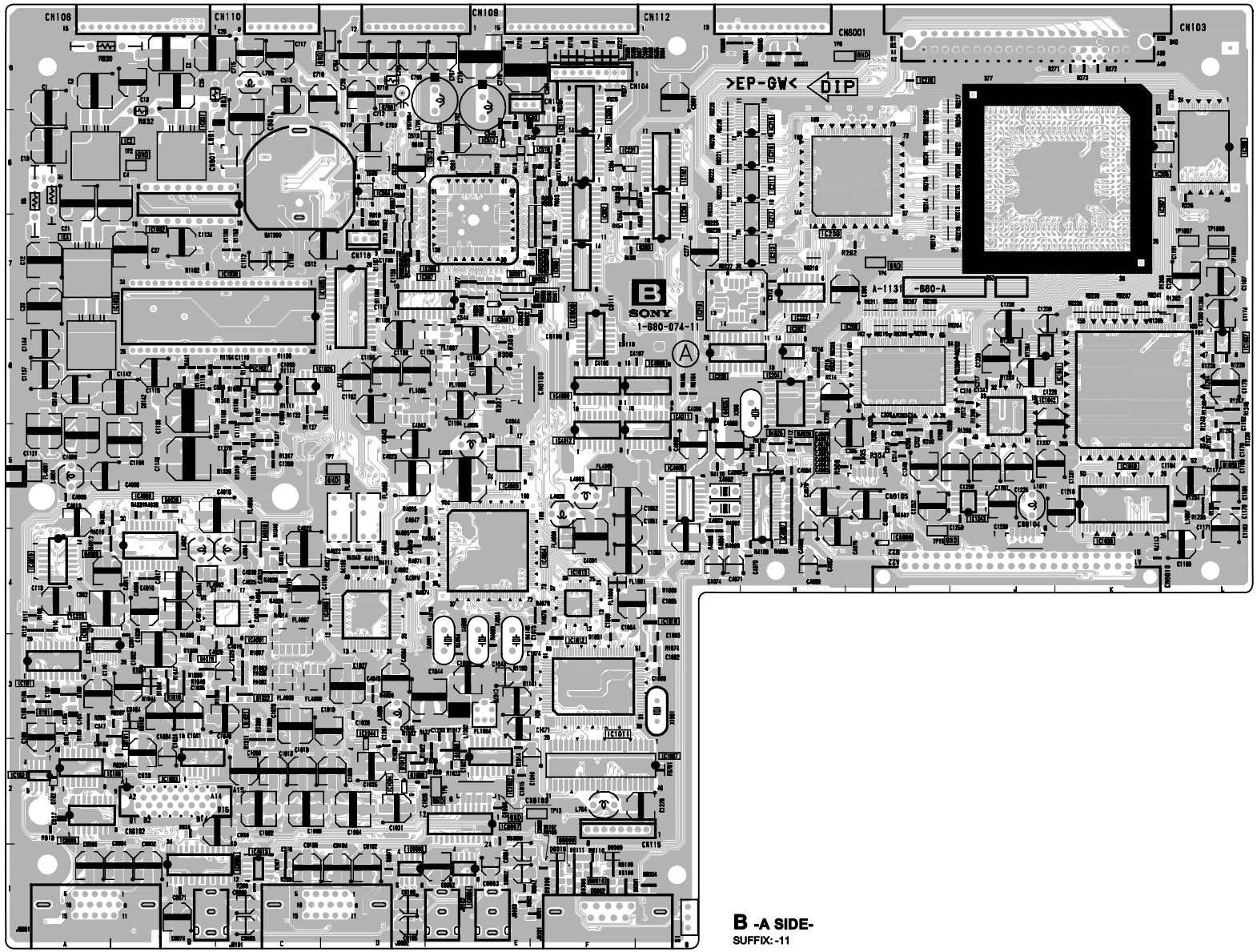

B -A SIDE-
SUFFIX: -11

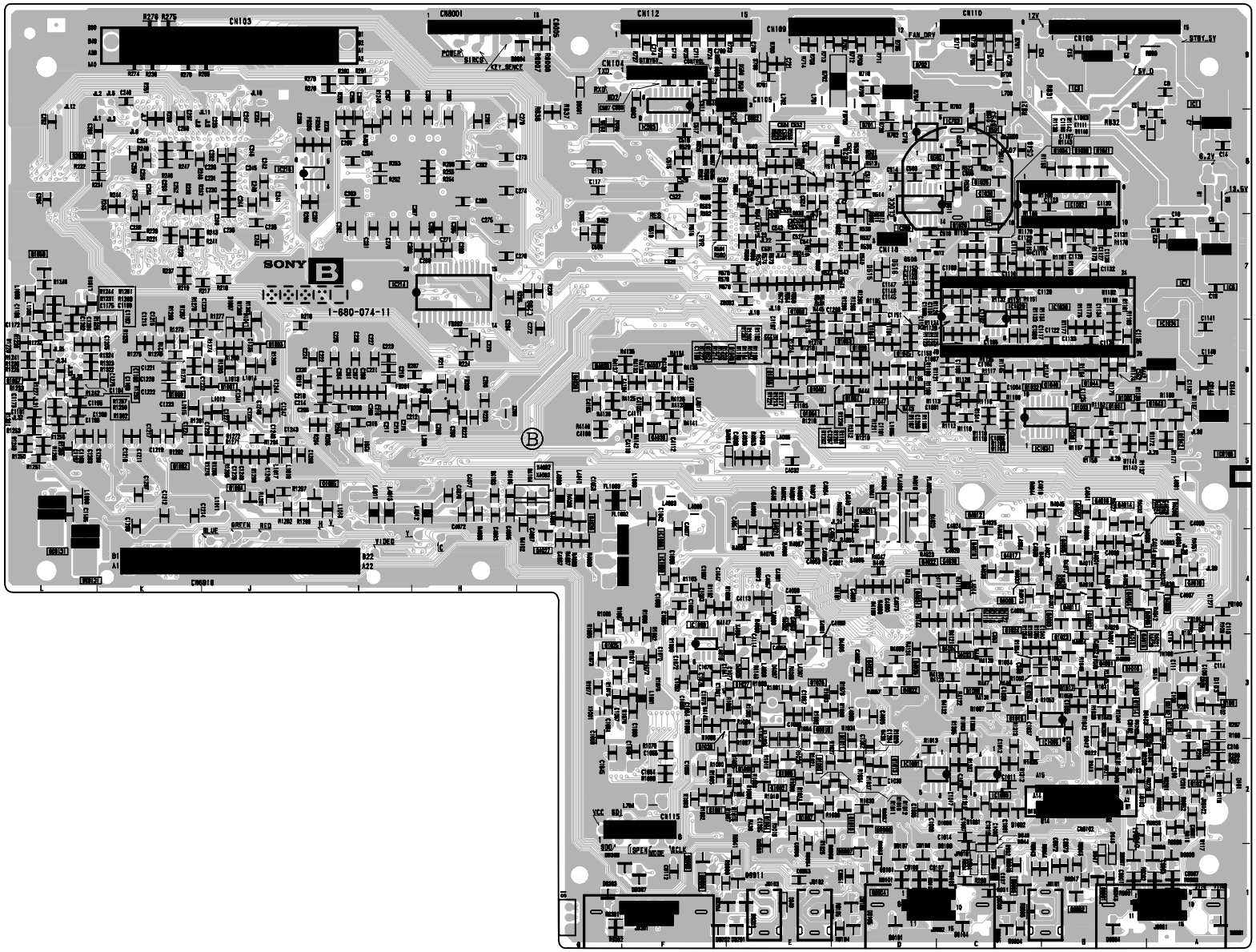

B -B SIDE-
SUFFIX: -11

B BOARD

* : B SIDE

D1	*A-8	IC2	A-8	Q100	*A-3	Q4010	*C-4
D100	A-3	IC4	A-7	Q101	A-3	Q4011	*B-4
D101	*A-2	IC100	A-2	Q102	*A-2	Q4012	*C-5
D102	A-3	IC101	A-3	Q103	*A-2	Q4013	*B-3
D103	*A-3	IC102	G-8	Q104	*A-3	Q4014	*B-5
D201	F-8	IC103	A-2	Q200	*L-8	Q4015	*B-3
D404	*E-5	IC200	I-6	Q203	G-7	Q4016	*B-5
D500	F-9	IC202	H-6	Q500	*C-8	Q4017	*C-4
D501	*E-9	IC204	H-6	Q501	*C-8	Q4018	C-4
D502	*F-9	IC205	K-8	Q502	*E-8	Q4019	*A-4
D503	*F-9	IC206	L-8	Q503	E-8	Q4021	*D-5
D504	F-9	IC207	K-8	Q507	*C-8	Q4022	*D-3
D505	F-9	IC208	H-8	Q700	D-9	Q4023	*D-3
D506	F-9	IC209	G-6	Q701	*D-8	Q4024	*E-5
D507	F-9	IC210	H-8	Q702	*D-9	Q4025	G-6
D508	F-9	IC211	H-8	Q1000	*E-2	Q4026	*G-5
D509	F-9	IC212	H-7	Q1001	*F-2	Q4027	*G-4
D510	*C-8	IC213	H-7	Q1002	*E-2	Q4028	H-5
D511	*C-8	IC214	*H-7	Q1003	*E-2	Q4029	H-5
D512	E-8	IC215	H-8	Q1004	*E-2	Q4030	*C-4
D513	D-8	IC216	G-7	Q1005	*E-2	Q4031	*D-4
D514	*C-8	IC218	*J-8	Q1006	E-2	Q4032	*D-4
D515	*D-7	IC219	I-9	Q1007	*E-2	Q4033	*C-3
D516	*D-7	IC220	G-8	Q1008	*E-3	Q4034	*C-3
D700	*E-9	IC221	F-8	Q1009	D-2	Q4035	*D-3
D701	*C-9	IC222	H-7	Q1010	*D-2	Q4036	*G-6
D702	*D-9	IC223	A-4	Q1011	*D-2	Q4037	*F-6
D703	*C-9	IC500	*D-8	Q1012	D-2	Q4038	*G-6
D704	*C-9	IC501	A-5	Q1013	*D-2	Q4039	*F-5
D705	*C-9	IC502	F-7	Q1014	*B-3	Q6181	B-2
D804	*C-1	IC503	*F-9	Q1015	*C-3	Q6182	*A-3
D805	*C-1	IC504	D-8	Q1016	*B-3	Q6193	*B-2
D940	*B-2	IC505	F-8	Q1017	*B-3	Q6804	*D-1
D941	*B-2	IC507	E-7	Q1018	B-3	Q6901	*B-1
D942	*B-3	IC508	F-8	Q1019	B-3	Q6902	*B-1
D943	*B-2	IC509	E-7	Q1020	*C-3	Q6903	*C-1
D944	*C-1	IC510	F-8	Q1021	C-3	Q6905	*F-1
D945	*C-1	IC511	F-8	Q1022	C-3	Q6906	*F-1
D946	*B-1	IC512	E-8	Q1023	*B-3	Q6907	*D-1
D947	*B-1	IC513	E-8	Q1024	*C-3	Q6908	*D-2
D948	*E-1	IC703	*D-8	Q1025	*G-3	Q6909	F-1
D1000	*C-2	IC831	B-8	Q1026	*E-3	Q6910	F-1
D1001	*C-2	IC1000	*C-2	Q1027	*E-3	Q6911	*E-1
D1002	*C-2	IC1001	*D-2	Q1028	*F-2	Q8001	E-7
D1003	*C-3	IC1002	E-2	Q1029	*C-7	Q8002	F-7
D1004	B-3	IC1003	B-2	Q1030	*B-6	Q9302	F-1
D1005	*E-2	IC1004	D-2	Q1031	*B-6		
D1006	C-6	IC1005	*B-3	Q1032	*C-6	TP2	B-8
D1007	*J-7	IC1006	*F-3	Q1033	*B-6	TP3	D-9
D4000	*B-4	IC1007	F-2	Q1034	*B-8	TP4	I-7
D4001	*B-4	IC1010	G-4	Q1035	*C-8	TP5	E-2
D4002	A-5	IC1011	F-2	Q1036	*C-8	TP7	D-5
D4003	*A-4	IC1012	F-3	Q1037	*C-7	TP9	H-9
D4005	*D-4	IC1013	F-4	Q1038	*B-5	TP15	I-4
D4006	*D-3	IC1027	C-6	Q1039	*B-8	TP1007	L-7
D4007	*E-3	IC1028	C-6	Q1040	*B-6	TP1008	L-7
D4008	*E-3	IC1029	*C-7	Q1041	*B-8	TP1009	L-7
D6181	*B-2	IC1030	C-7	Q1042	*A-5		
D6182	B-3	IC1031	*C-6	Q1043	*A-6		
D6183	*A-3	IC1032	B-7	Q1044	*B-6		
D6184	*A-2	IC1033	A-7	Q1045	*D-6		
D8001	*G-9	IC1034	*A-6	Q1046	*E-6		
D8002	H-9	IC1035	D-7	Q1047	*D-6		
D8003	H-9	IC1037	L-6	Q1048	*D-6		
D8004	*G-9	IC1039	K-4	Q1049	*E-6		
D9001	*A-1	IC1040	K-5	Q1050	*D-6		
D9004	*B-1	IC1041	K-6	Q1051	*D-6		
D9005	*C-1	IC1042	J-6	Q1052	*E-6		
D9006	*C-1	IC1043	J-5	Q1053	*D-6		
D9007	*B-1	IC1044	D-2	Q1054	*E-6		
D9008	*A-1	IC4000	B-5	Q1055	*E-6		
D9009	*A-1	IC4001	C-3	Q1056	*E-6		
D9101	*D-1	IC4003	E-5	Q1057	*L-6		
D9104	*C-1	IC4004	F-4	Q1058	L-5		
D9105	*D-1	IC4005	G-5	Q1059	*L-7		
D9106	*D-1	IC4006	D-4	Q1061	*J-6		
D9107	*D-1	IC4007	H-4	Q1062	*K-5		
D9108	*D-1	IC4008	G-6	Q1063	*J-6		
D9109	*C-1	IC4009	F-6	Q1064	*J-5		
D9202	*F-1	IC4010	A-4	Q1065	*I-5		
D9203	*E-1	IC4011	G-6	Q1066	*C-3		
D9204	*F-1	IC4012	F-5	Q1067	C-6		
D9301	F-1	IC4013	C-1	Q1080	*K-6		
D9302	F-1	IC4020	B-5	Q4000	*A-4		
D9303	*G-1	IC6105	*A-5	Q4001	*B-3		
D9304	G-1	IC6903	D-1	Q4002	*B-4		
D9305	F-1	IC6904	E-1	Q4003	*B-4		
D9306	F-1	IC6905	C-1	Q4004	*B-4		
D9307	*F-1	IC6906	A-2	Q4005	*B-4		
D9308	*F-1	IC6907	E-2	Q4006	*C-4		
D9309	F-1	IC6908	I-4	Q4007	*B-5		
D9310	F-1	IC6909	F-6	Q4008	*B-4		
		IC8001	E-7	Q4009	A-4		

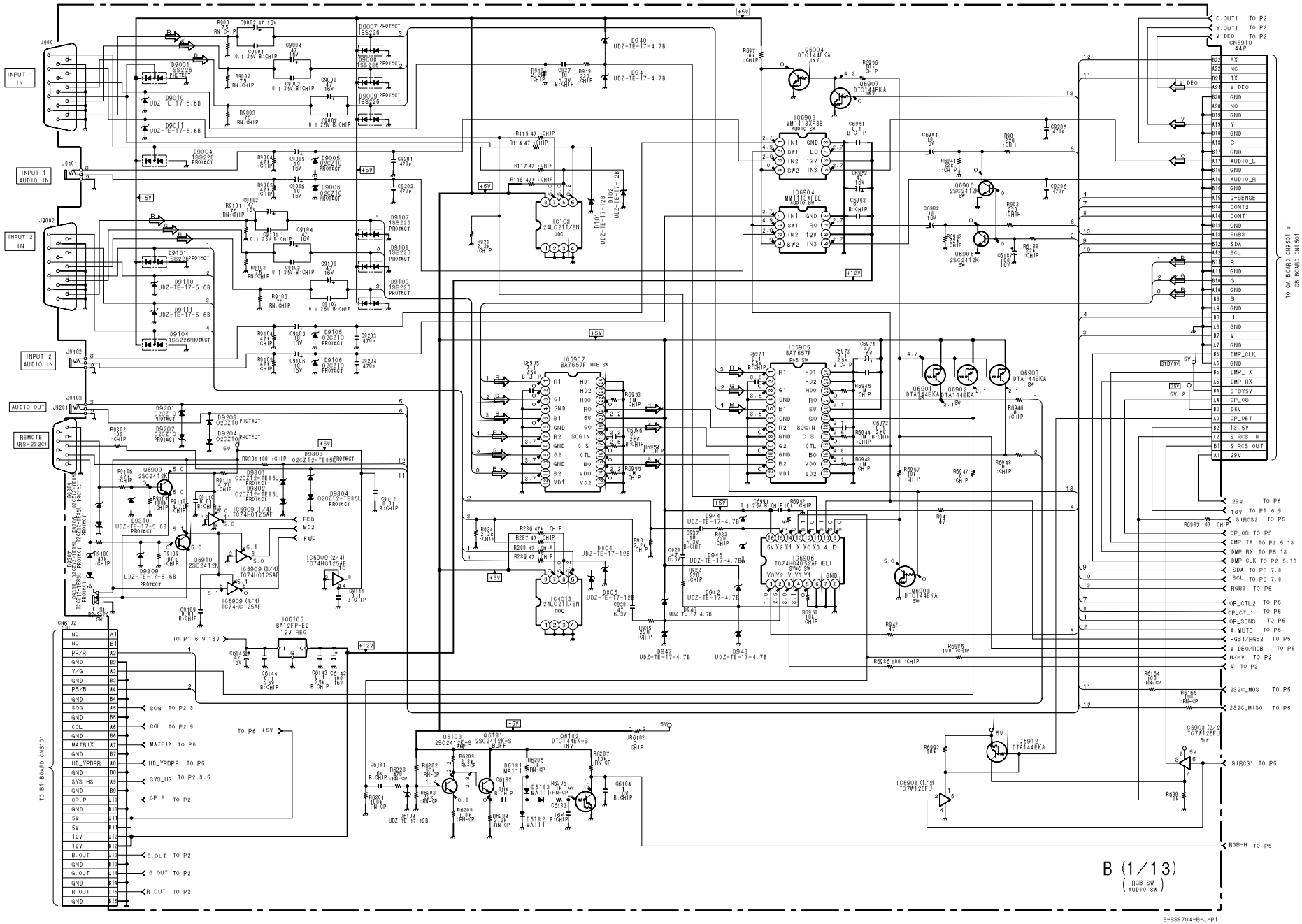
INPUT 1 IN
INPUT 1 AUDIO IN
INPUT 2 IN
INPUT 2 AUDIO IN
AUDIO OUT
REMOTE (RS-232C)
TO B1 BOARD CN6101
TO 0A BOARD CN9501
TO 0B BOARD CN9501
B (1/13)
(RGB SW, AUDIO SW)
B-SS9704-B-J-P1

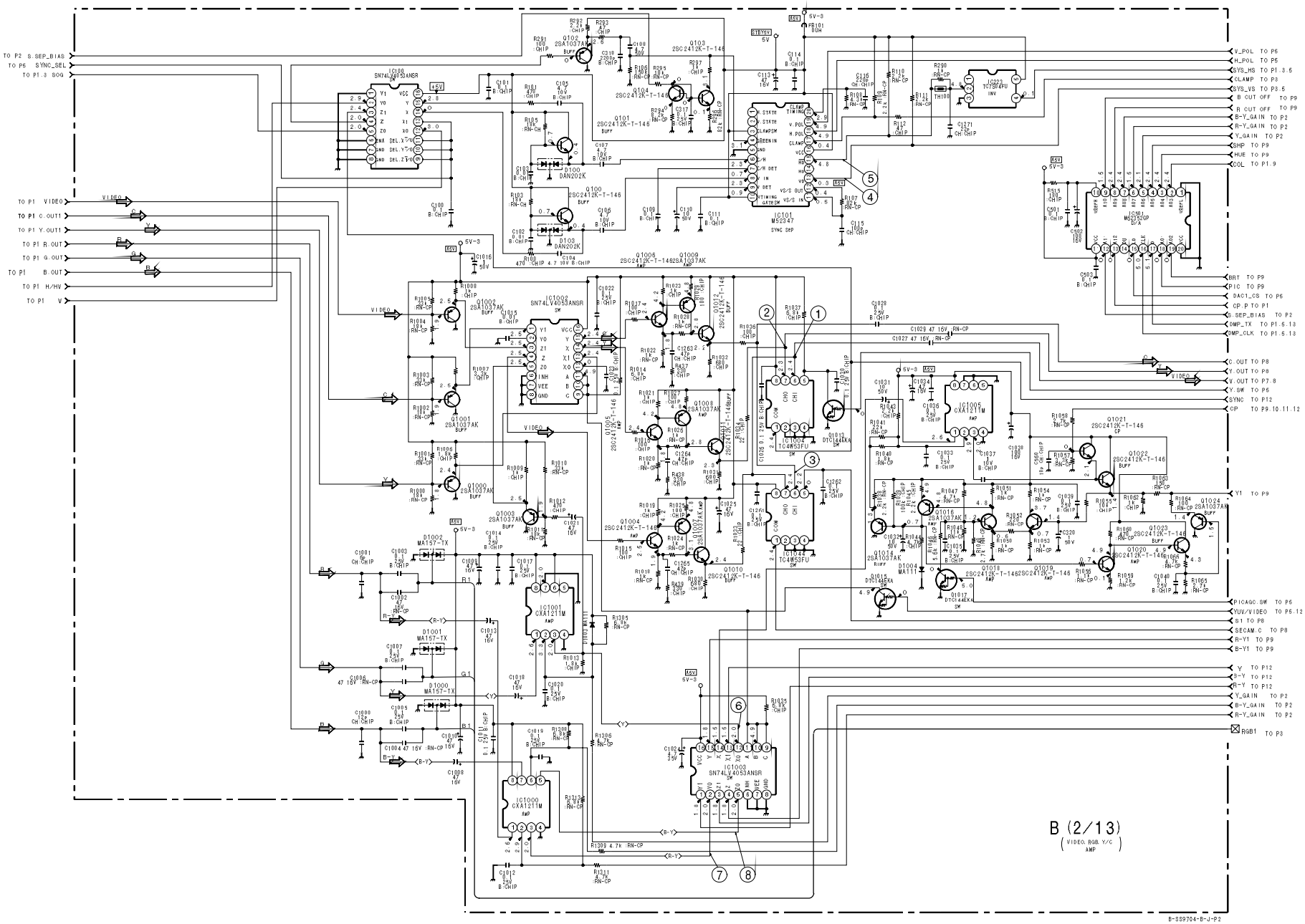
B (2/13)
(VIDEO, RGB, Y/C AMP)
B-S59704-B-J-P2

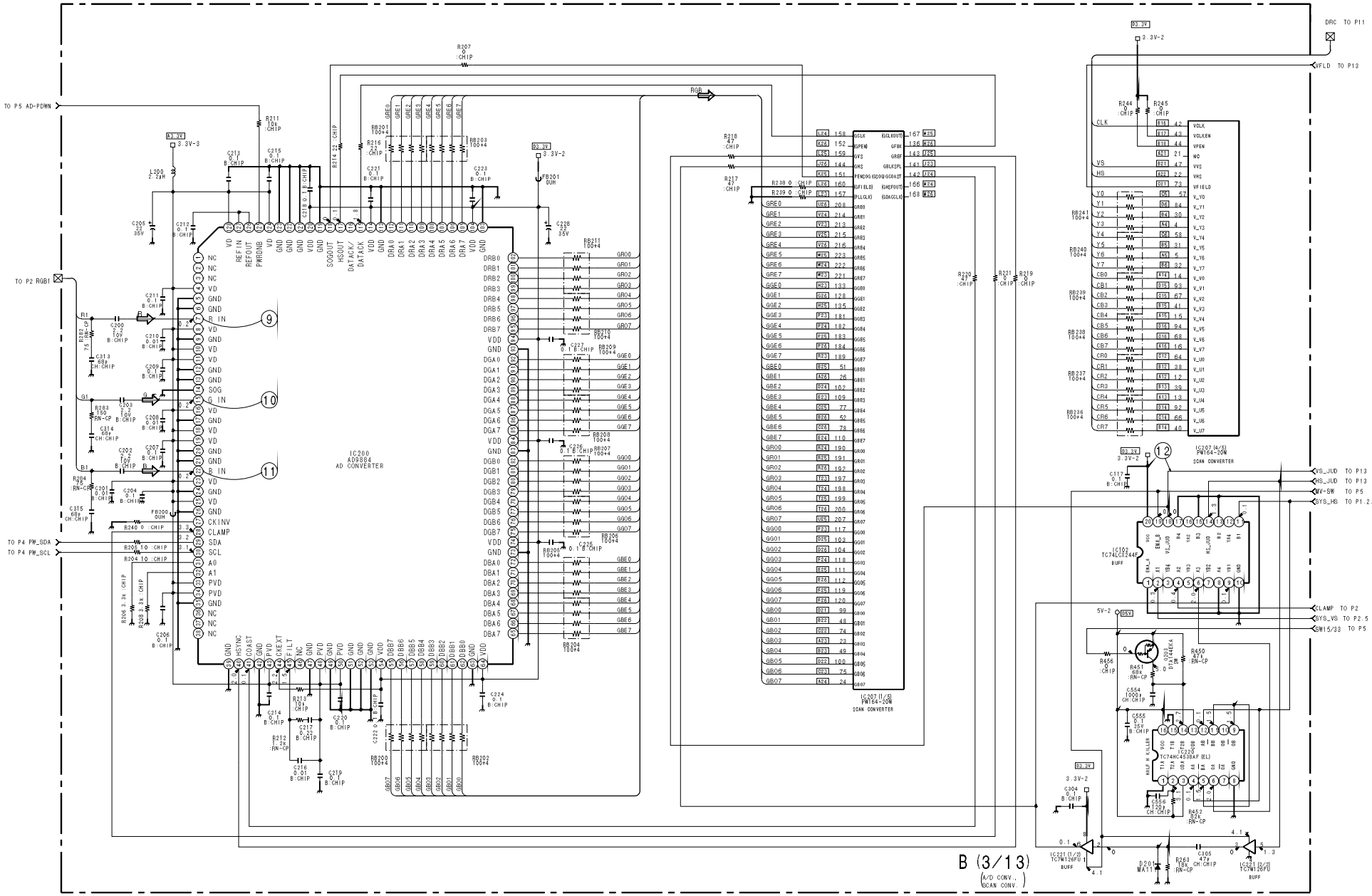
IC200
AD9884
AD CONVERTER
IC207 (4/5)
PW164-20W
SCAN CONVERTER
IC207 (1/5)
PW164-20W
SCAN CONVERTER
IC102
TC74LCX244F
BUFF
IC220
TC74HC4538AF (EL)
IC221 (1/2)
TC7W126FU
BUFF
IC221 (2/2)
TC7W126FU
BUFF
B (3/13)
A/D CONV.
SCAN CONV.
B-SS9704-B-J-P3

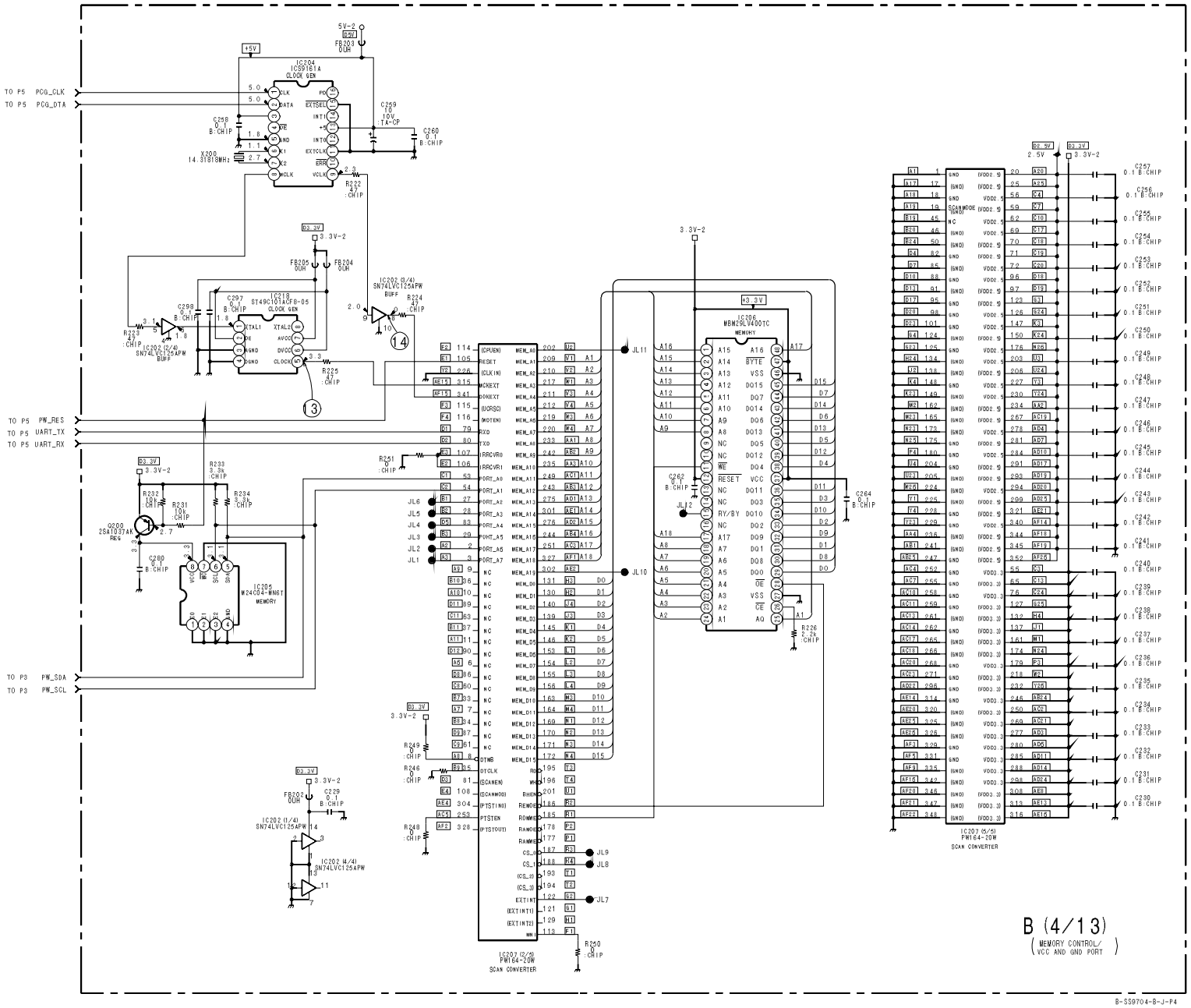
TO P5 PCG_CLK
TO P5 PCG_DTA
TO P5 PW_RES
TO P5 UART_TX
TO P5 UART_RX
TO P3 PW_SDA
TO P3 PW_SCL
IC204 ICS9161A CLOCK GEN
X200 14.31818MHz
IC218 ST49C101ACF6-05 CLOCK GEN
IC206 MBM29LV400TC MEMORY
IC205 M24C04-WMST MEMORY
IC207 (1/5) PW164-20W SCAN CONVERTER
IC207 (5/5) PW164-20W SCAN CONVERTER
IC202 (1/4) SN74LVC125APW BUFF
IC202 (2/4) SN74LVC125APW BUFF
IC202 (3/4) SN74LVC125APW BUFF
IC202 (4/4) SN74LVC125APW BUFF
Q200 2SA1037AK REG
B (4/13)
(MEMORY CONTROL/ VCC AND GND PORT)
B-SS9704-B-J-P4

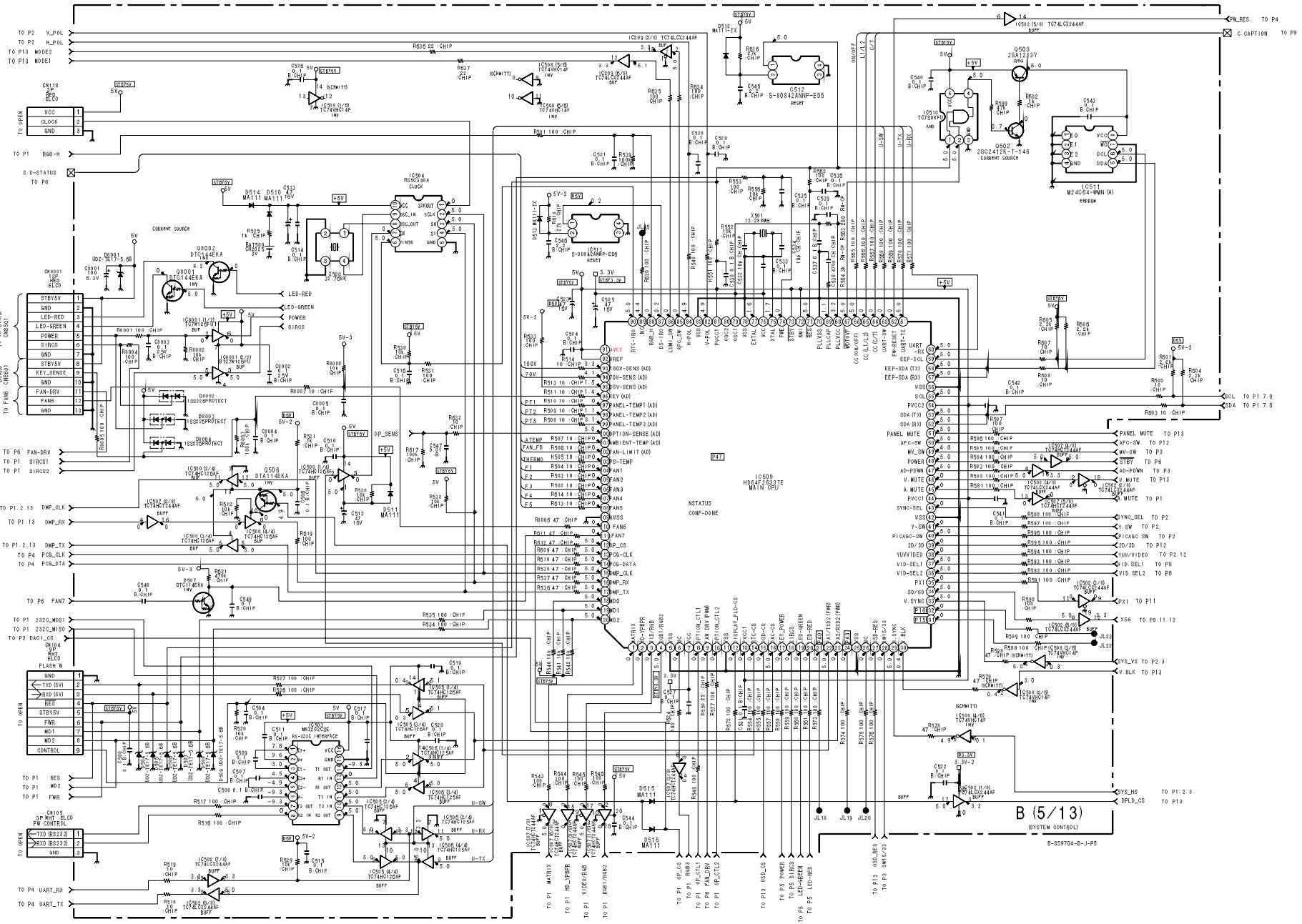
B (5/13)
(SYSTEM CONTROL)
B-SS9704-B-J-P5
MAIN CPU
HD64F2633TE
NSTATUS
CONF-DONE
P47
CURRENT SOURCE
RESET
EEPROM
CLOCK
FLASH M
PW CONTROL
RS-232C INTERFACE
LED-RED
LED-GREEN
POWER
SIRCS
FAN7
FAN6
DMP_CLK
DMP_RX
DMP_TX
PCS_CLK
PCS_DATA
UART_RX
UART_TX
MATRIX
VIDEO/RGB
RGB1/RGB2
OP_CS
OP_CTL1
OP_CTL2
FAN_DRV
OSD_CS
PWMB/JB3
SYS_HS
DPLD_CS
SYS_VS
V.BLK
X56
PXI
SYNC_SEL
V.SW
PICAGC_SW
SD/3D
YUV/VIDEO
VID.SEL1
VID.SEL2
AFC-SW
MV_SW
STBY
AD-PDWN
V.MUTE
A.MUTE
EEP-SCL
EEP-SDA (TX)
EEP-SDA (RX)
PANEL MUTE
SCL
SDA
PW_RES
C.CAPTION
S.D-STATUS
R-IN
L-IN
R-OUT
L-OUT
U-SW
U-TX
U-RX
U-RS
TO P1 R/B/H
TO P1 G/Y
TO P1 B/PB
TO P1 H/CSYNC
TO P1 V
TO P1 MODE1
TO P1 MODE2
TO P2 V_POL
TO P2 H_POL
TO P6 FAN-DRV
TO P1 SIRCS1
TO P1 SIRCS2
TO P6 FAN7
TO P1 232C_MOSI
TO P1 232C_MISO
TO P2 DAC1_CS
TO P1 RES
TO P1 MD2
TO P1 FWR
TO P1 MD1
TO P1 MD0
TO P1 232C_MOSI
TO P1 232C_MISO
TO P2 DAC1_CS
TO P1 RES
TO P1 MD2
TO P1 FWR
TO P1 MD1
TO P1 MD0
TO P1 MATRIX
TO P1 MD_VPBPR
TO P1 VIDEO/RGB
TO P1 RGB1/RGB2
TO P1 OP_CS
TO P1 RGB3
TO P1 OP_CTL1
TO P6 FAN_DRV
TO P1 OP_CTL2
TO P13 OSD_CS
TO P5 POWER
TO P5 SIRCS
TO P5 LED-GREEN
TO P5 LED-RED
TO P13 PWMB/JB3
TO P3
TO P4 UART_RX
TO P4 UART_TX
TO P1 2.13 DMP_CLK
TO P1 2.13 DMP_RX
TO P1 2.13 DMP_TX
TO P4 PCS_CLK
TO P4 PCS_DATA
TO P6 FAN-DRV
TO P1 SIRCS1
TO P1 SIRCS2
TO P6 FAN7
TO P1 232C_MOSI
TO P1 232C_MISO
TO P2 DAC1_CS
TO P1 RES
TO P1 MD2
TO P1 FWR
TO P4 UART_RX
TO P4 UART_TX
TO P1 P4
TO P9
TO P2
TO P3
TO P5
TO P6
TO P11
TO P12
TO P13
TO P1.7.8
TO P1.2.3
TO P1.2.12
TO P8
TO P8.11.12
TO P1.2.3
TO P13
TO P1
TO P2
TO P4
TO P5
TO P6
TO P8
TO P11
TO P12
TO P13
TO P1.7.8
TO P1.2.3
TO P1.2.12
TO P8.11.12
TO P1.2.3
TO P13
TO P1
TO P2
TO P3

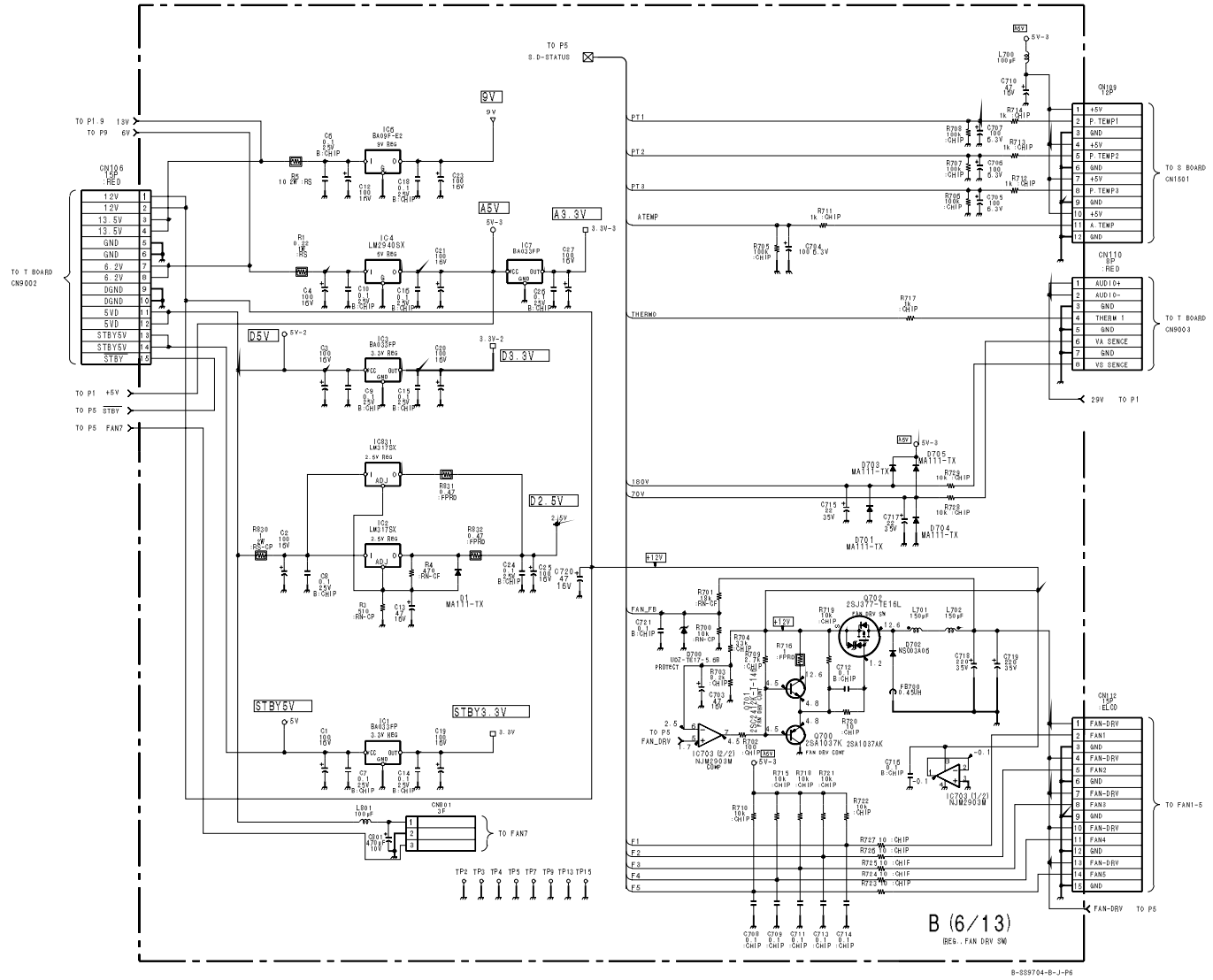
B (6/13)
(REG., FAN DRV SW)
B-8S9704-B-J-P6

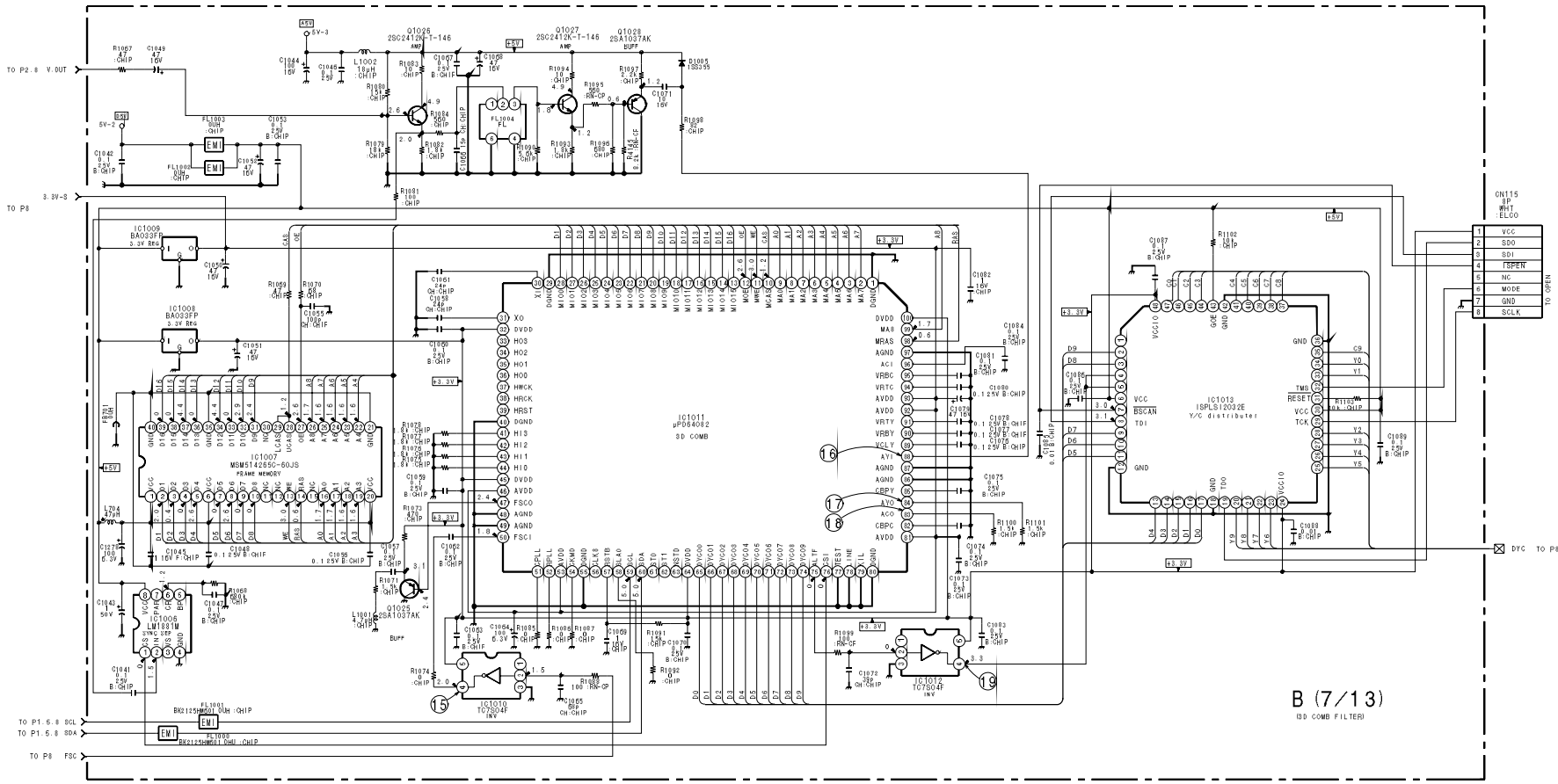
B (7/13)
(3D COMB FILTER)
B-SS9704-B-J-P7
IC1011 μPD64082 3D COMB
IC1007 MSM514265C-60JS FRAME MEMORY
IC1013 ISPLSI2032E Y/C distributer
IC1006 LM1881M SYNC SEP
IC1008 BA033FP 3.3V REG
IC1009 BA033FP 3.3V REG
IC1010 TC7S04F INV
IC1012 TC7S04F INV
Q1025 2SA1037AK BUFF
Q1026 2SC2412K-T-146 AMP
Q1027 2SC2412K-T-146 AMP
Q1028 2SA1037AK BUFF
CN115 6P WHT :ELCO
TO P2.8 V.OUT
TO P8
TO P1.5.8 SCL
TO P1.5.8 SDA
TO P8 FSC
TO DYC TO P8

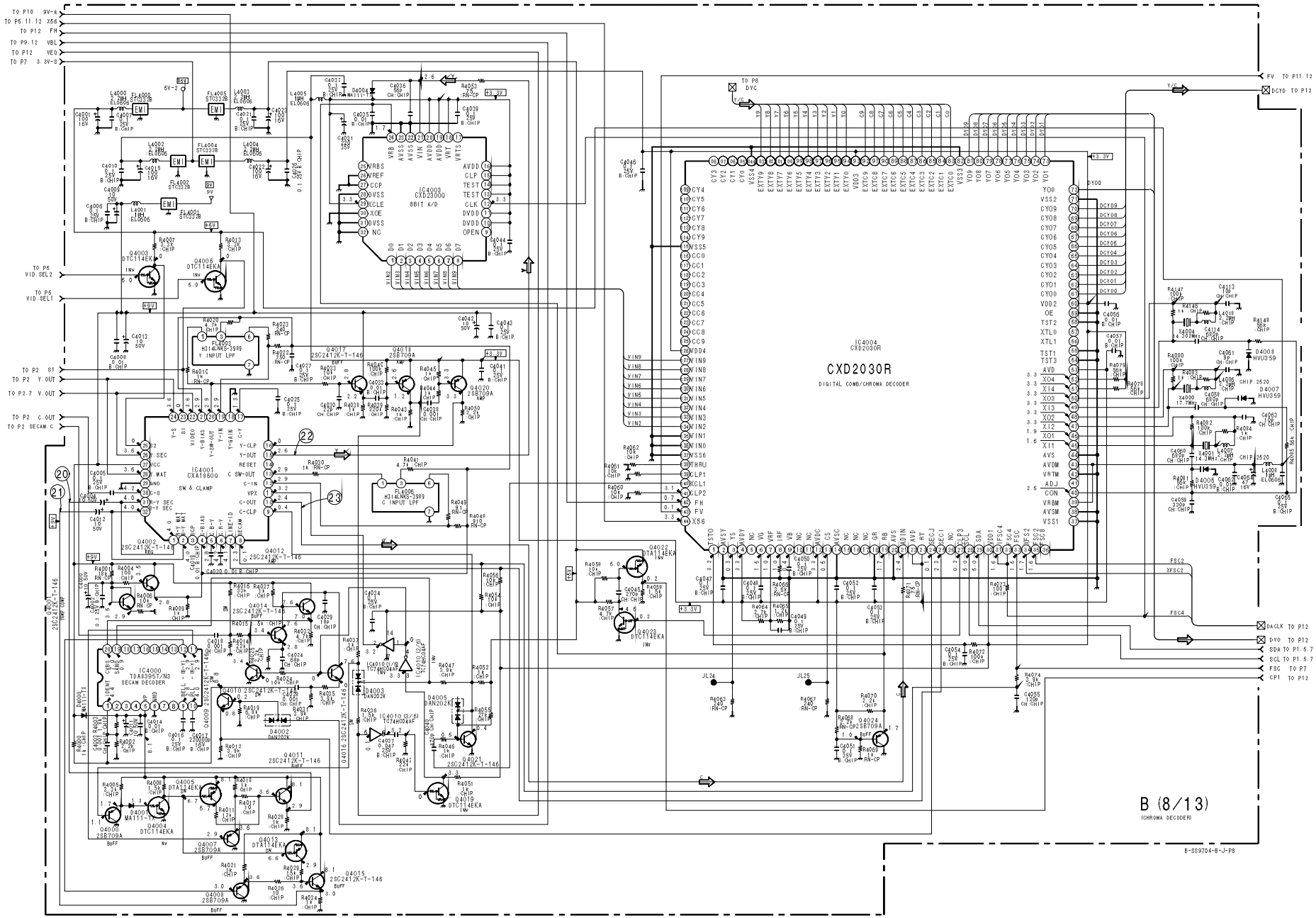
IC4004
CXD2030R
DIGITAL COMB/CHROMA DECODER
IC4003
CXD2300Q
8BIT A/D
IC4001
CXA1860Q
SW & CLAMP
IC4000
TDA8395T/N3
SECAM DECODER
B (8/13)
(CHROMA DECODER)
B-SS9704-B-J-P8

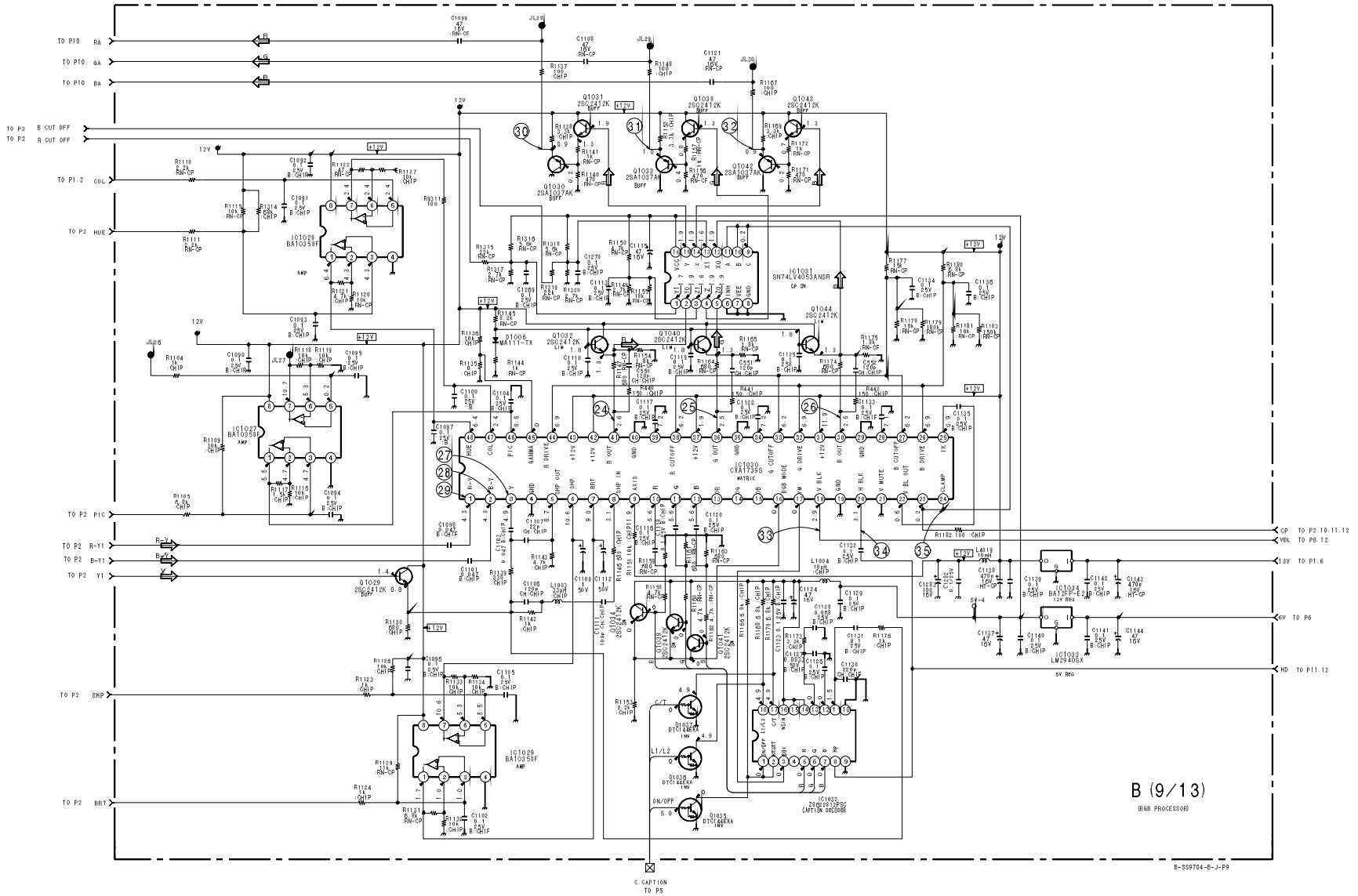
B (9/13)
(RGB PROCESSOR)
B-SS9704-B-J-P9

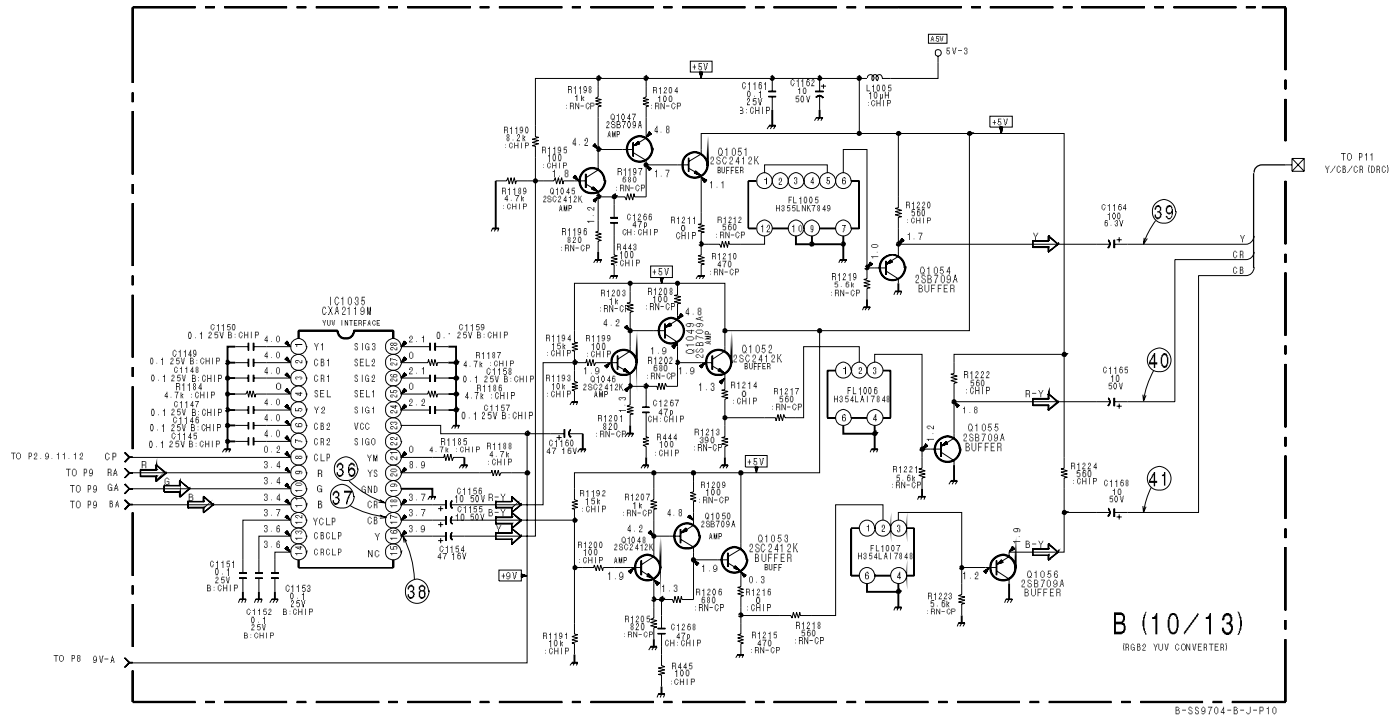
B (10/13)
(RGB2 YUV CONVERTER)
B-SS9704-B-J-P10
IC1035
CXA2119M
YUV INTERFACE
TO P11
Y/CB/CR (DRC)
TO P2..9..11..12 CP
TO P9 RA
TO P9 GA
TO P9 BA
TO P8 9V-A
5V-3
+5V
+9V
Q1047 2SB709A AMP
Q1048 2SC2412K AMP
Q1049 2SC2412K AMP
Q1050 2SB709A AMP
Q1051 2SC2412K BUFFER
Q1052 2SC2412K BUFFER
Q1053 2SC2412K BUFFER
Q1054 2SB709A BUFFER
Q1055 2SB709A BUFFER
Q1056 2SB709A BUFFER
FL1005 H355LNK7849
FL1006 H354LA17848
FL1007 H354LA17849

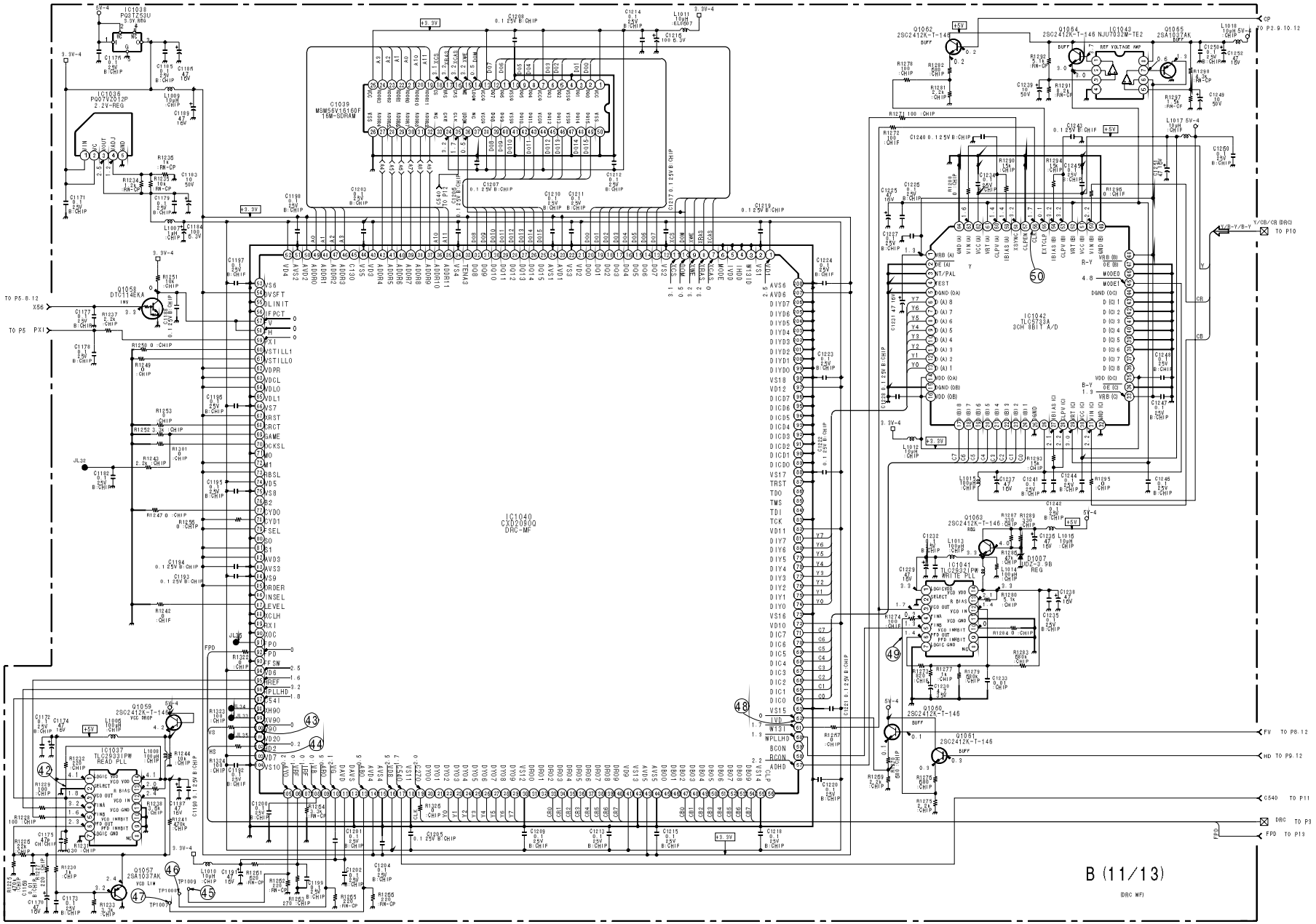
IC1040
CXD2090Q
DRC-MF
IC1042
TLC5733A
3CH 8BIT A/D
IC1036
PQ07VZ012P
2.2V-REG
IC1038
PQ3TZ53U
IC1037
TLC2933IPW
READ PLL
IC1041
TLC2932IPW
WRITE PLL
IC1043
NJU7032M-TE2
REF VOLTAGE AMP
Q1058
DTC114EKA
Q1059
2SC2412K-T-146
Q1057
2SA1037AK
Q1060
2SC2412K-T-146
Q1061
2SC2412K-T-146
Q1062
2SC2412K-T-146
Q1063
2SC2412K-T-146
Q1064
2SC2412K-T-146
Q1065
2SA1037AK
Q1007
UDZ-3.9B
REG
TO P5.8.12
X56
TO P5 PX1
TO P2.9.10.12
TO P10
FV TO P8.12
HD TO P9.12
C540 TO P11
DRC TO P3
FPD TO P13
B (11/13)
(DRC MF)
8-SS9704-B-J-P11

A B C D E F G H

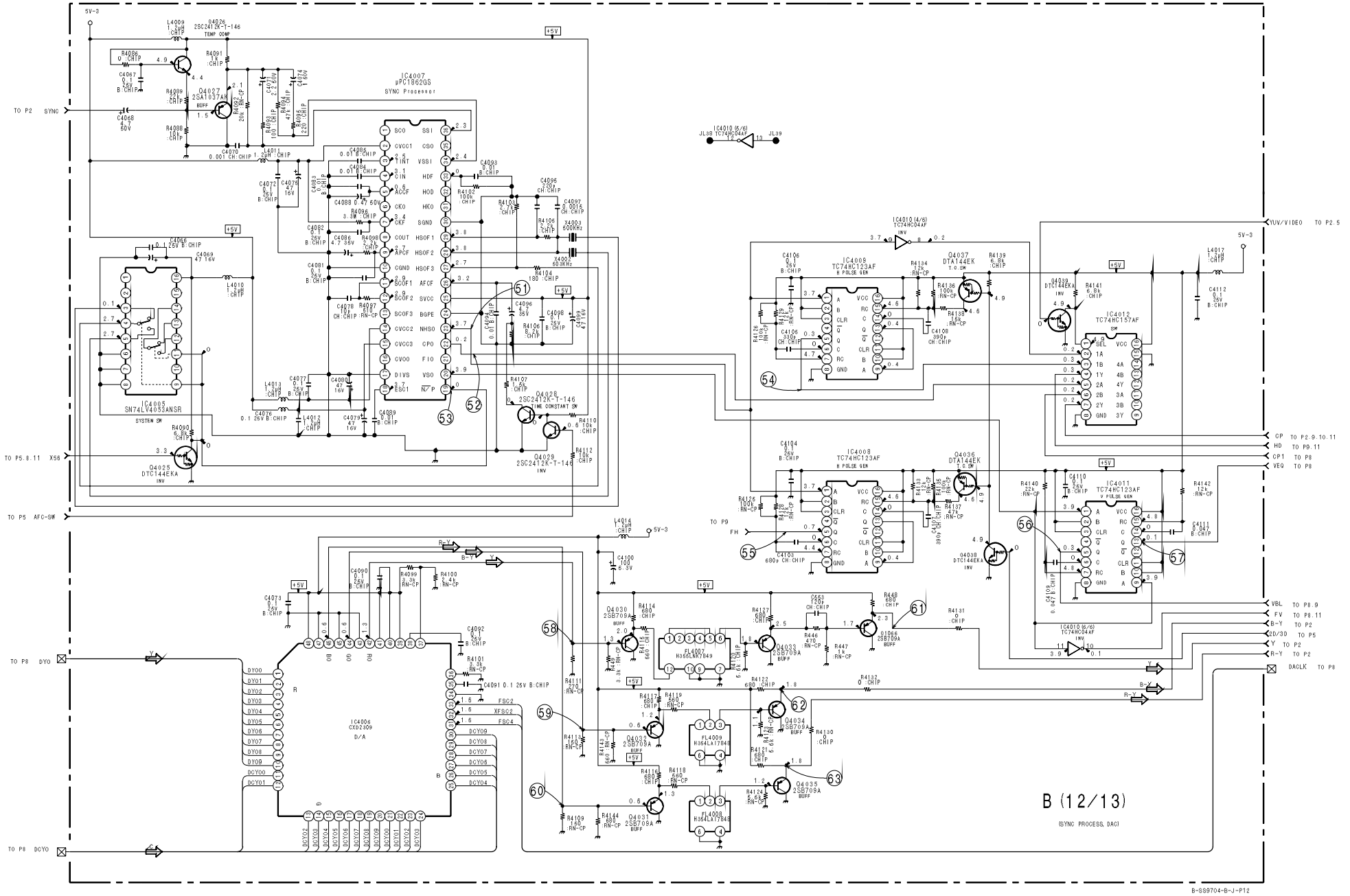
IC4007
μPC1862GS
SYNC Processor
IC4005
SN74LV4053ANSR
SYSTEM SW
IC4006
CXD2309
D/A
IC4009
TC74HC123AF
H PULSE GEN
IC4008
TC74HC123AF
H PULSE GEN
IC4011
TC74HC123AF
V PULSE GEN
IC4012
TC74HC157AF
SW
Q4026
2SC2412K-T-146
TEMP COMP
Q4027
2SA1037AK
Q4028
2SC2412K-T-146
TIME CONSTANT SW
Q4029
2SC2412K-T-146
Q4025
DTC144EKA
INV
Q4030
2SB709A
Q4031
2SB709A
Q4032
2SB709A
Q4033
2SB709A
Q4034
2SB709A
Q4035
2SB709A
Q4036
DTA144EK
Q4037
DTA144EK
Q4038
DTC144EKA
Q4039
DTC144EKA
Q4066
2SB709A
FL4007
H355LNK7849
FL4009
H354LA17848
FL4008
H354LA17848
IC4010 (5/6)
TC74HC04AF
IC4010 (4/6)
TC74HC04AF
IC4010 (6/6)
TC74HC04AF
TO P2 SYNC
TO P5.8.11 X56
TO P5 AFC-SW
TO P8 DYO
TO P8 DCYO
YUV/VIDEO TO P2.5
CP TO P2.9.10.11
HD TO P9.11
CP1 TO P8
VEQ TO P8
VBL TO P8.9
FV TO P8.11
B-Y TO P2
2D/3D TO P5
Y TO P2
R-Y TO P2
DACLK TO P8
TO P9
FH
B (12/13)
(SYNC PROCESS, DAC)
B-SS9704-B-J-P12

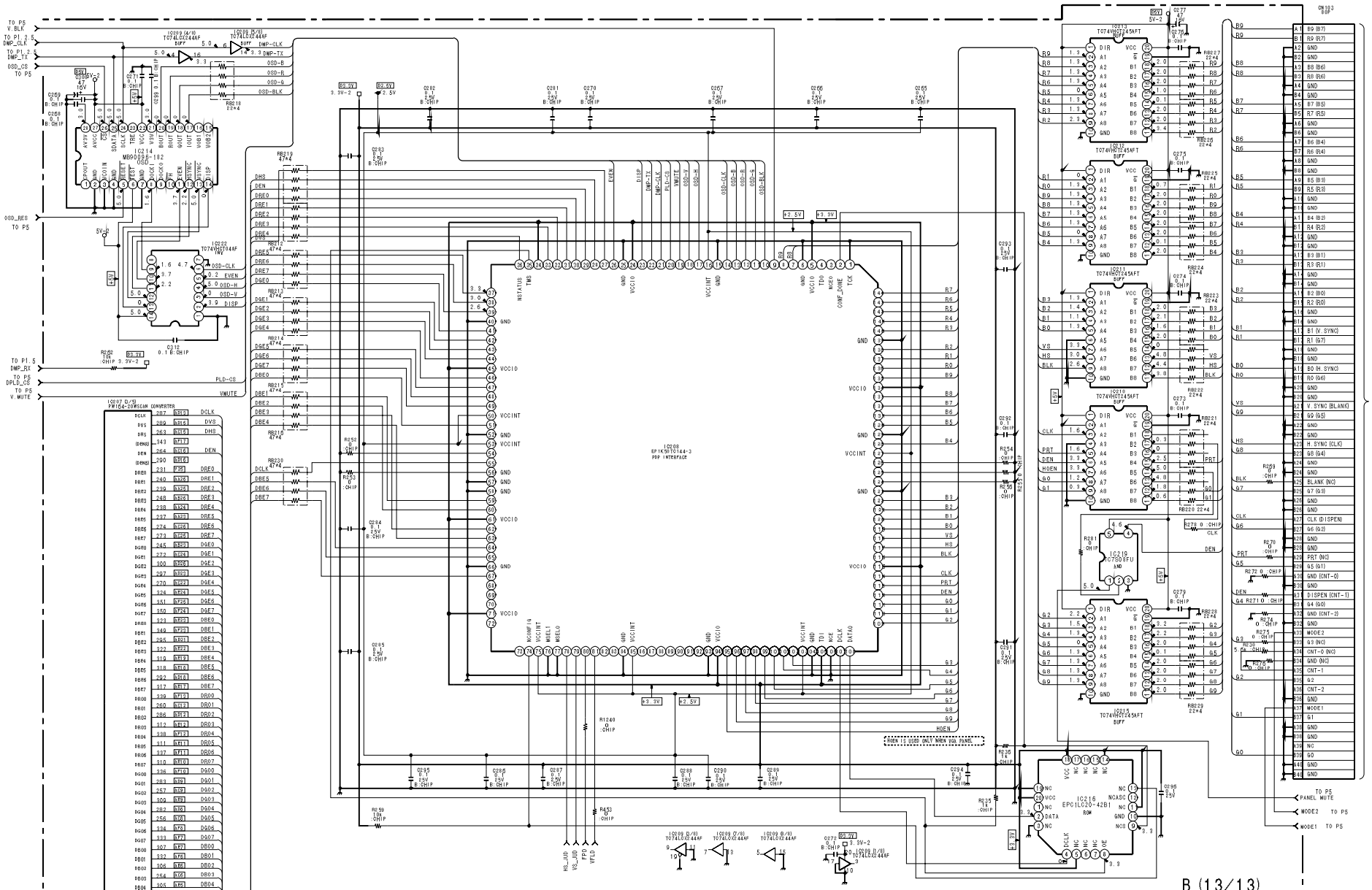
B (13/13)
(DISPLAY PORT/ PANEL INTERFACE)
B-8897O4-B-J-P19

24LC21T/SN (IC103, IC4013)

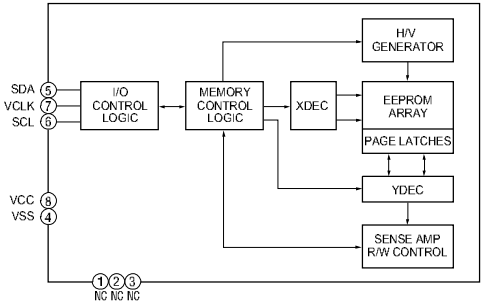

BA7657F (IC6905, IC6907)

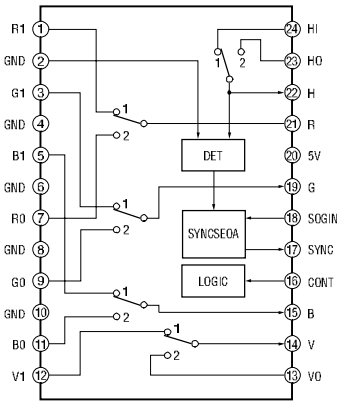

CXA1211M (IC1000, IC1001, IC1005)

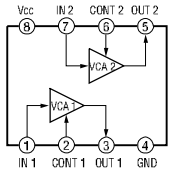

CXA1739S (IC1030)

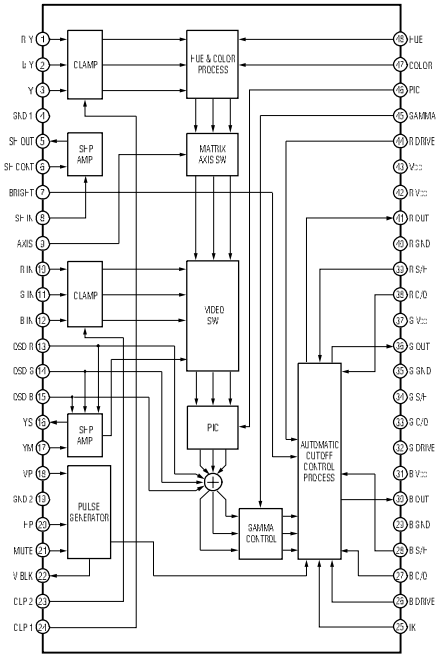

CXA1860Q (IC4001)

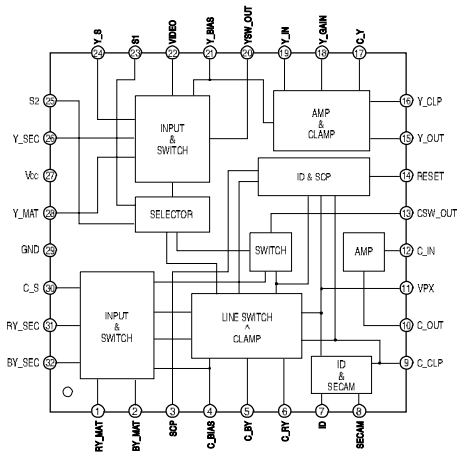

CXA2119M (IC1035)

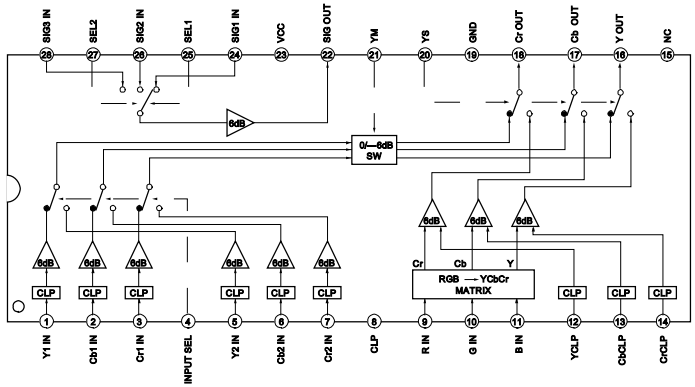

CXD2300Q (IC4003)

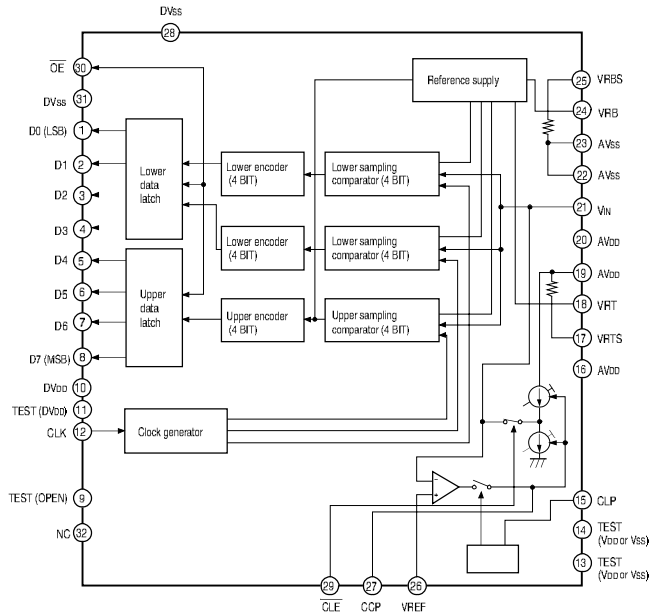

CXD2309 (IC4006)

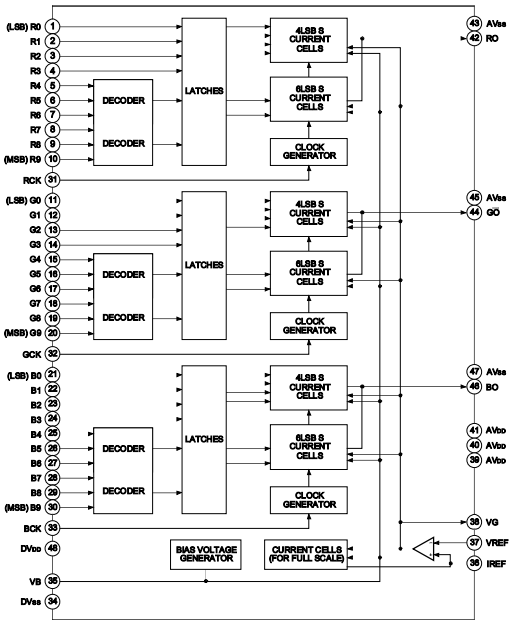

ICS9161A (IC204)

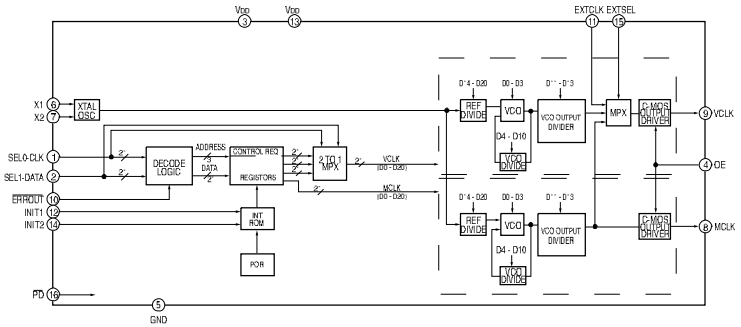

LM1881M (IC1006)

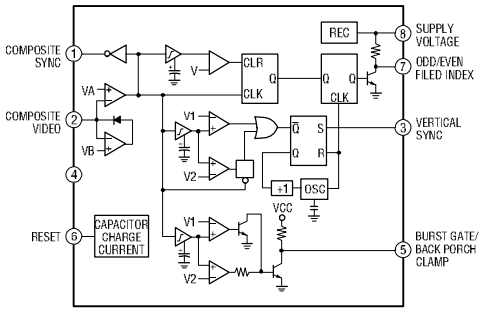

M52347 (IC101)

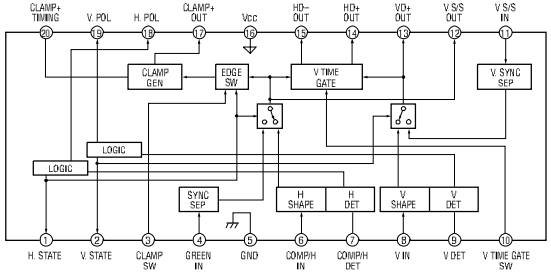

M62352GP (IC501)

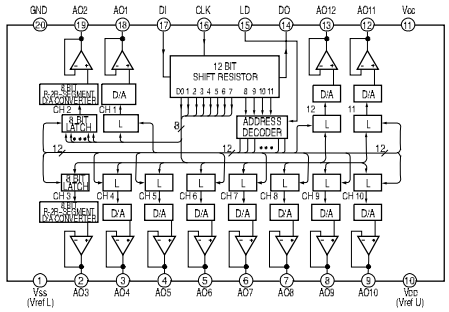

MAX202CSE (IC503)

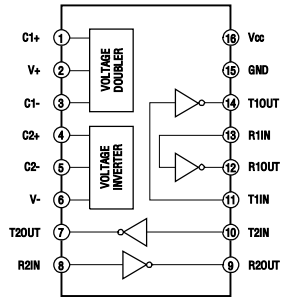

MM1113XFBE (IC6903, IC6904)

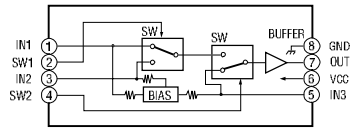

MB90096-182 (IC214)

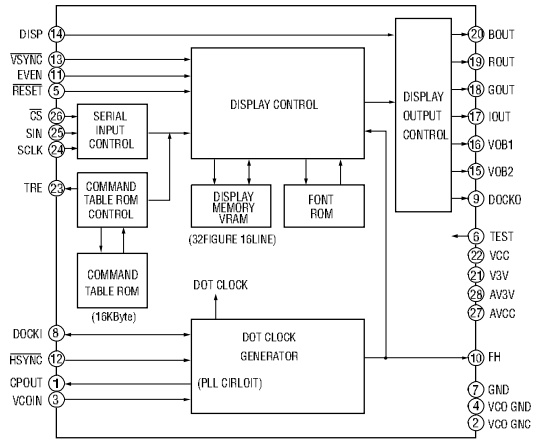

RS5C348A (IC504)

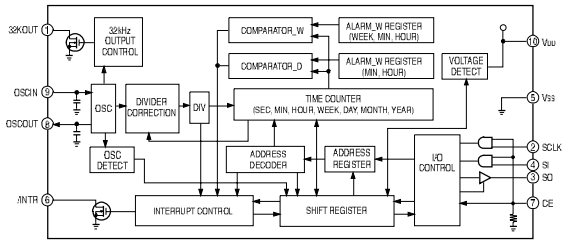

SN74LV4053ANSR (IC100, IC1002, IC1003, IC1031)

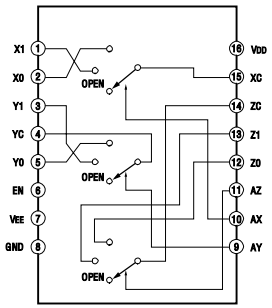

ST49C101ACF8-05 (IC218)

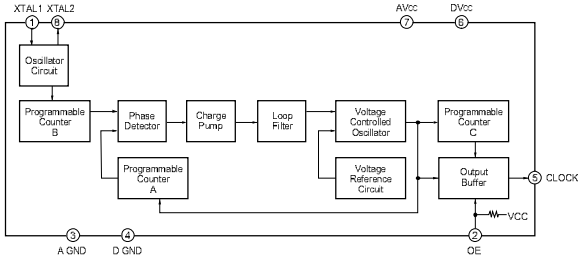

TC4W53FU (IC1004, IC1044)

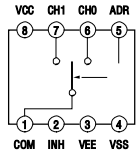

TC74HC123AF (IC4008, IC4009, IC4011)

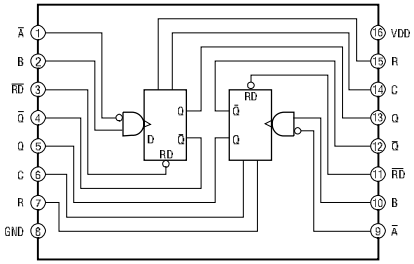

TC74HC157AF (IC4012)

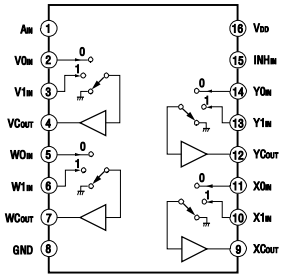

TC74HC4052AF (EL) (IC6906)

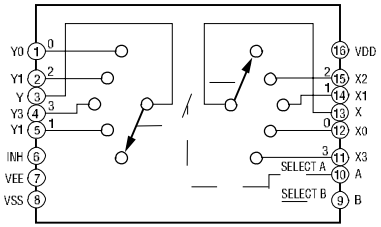

TC74HC4538AF (EL) (IC220)

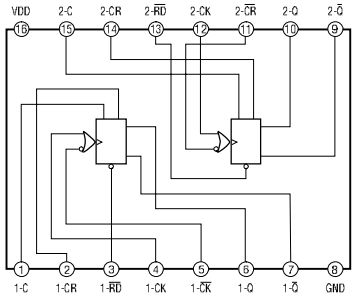

TC74LCX244F (IC102)

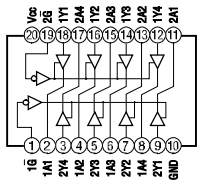

TC74VHCT04AF (IC222)

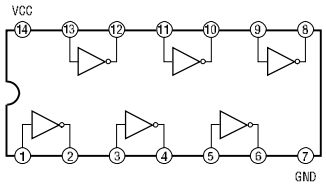

TC74VHCT245AFT (210, IC211, IC212, IC213, IC215)

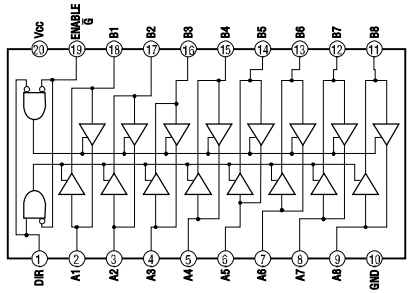

TC7S04FU (IC223)

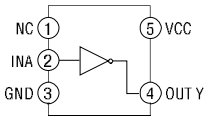

TC7S08FU (IC219)

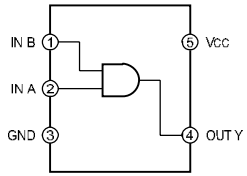

TDA8395T/N3 (IC4000)

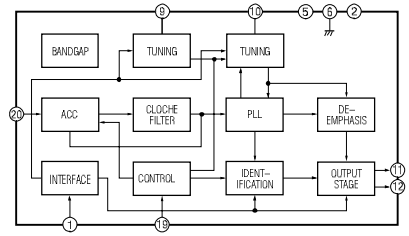

TLC2932IPW (IC1041)

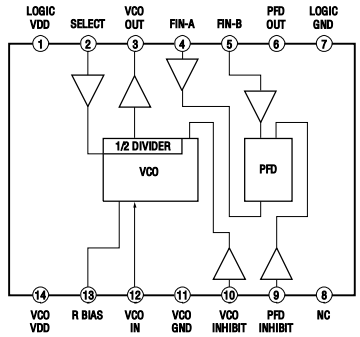

TLC2933IPW (IC1037)

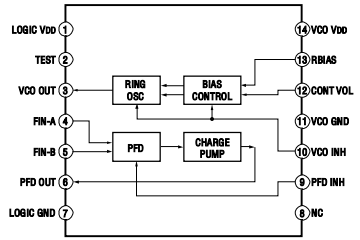

8-22

TLC5733A (IC1042)

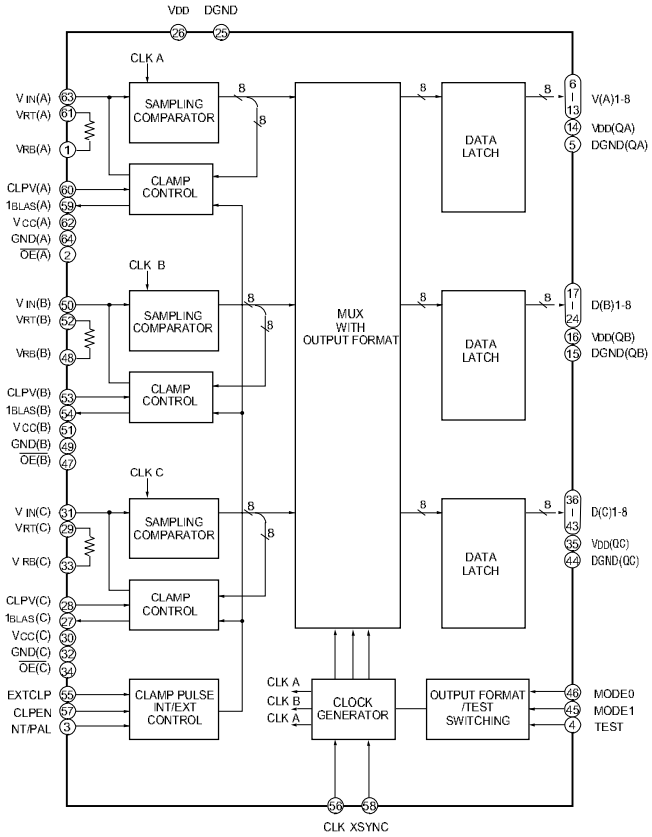

B Board Waveforms

① LINE 1.7Vp-p (H)	⑪ 580mVp-p (H)	㉑ SECAM 1.3Vp-p (2H)	㉛ YUV 620mVp-p (H)	㊶ YUV 1.2Vp-p (H)	㊿① Y/C 3.9Vp-p (H)	⑥① Y/C 720mVp-p (H)
② Y/C 1.7Vp-p (H)	⑫ 3.0Vp-p (V)	㉒ Y/C 920mVp-p (H)	㉜ YUV 600mVp-p (H)	㊷ YUV 2.3Vp-p (86MHz)	㊿② Y/C 4.2Vp-p (H)	⑥② Y/C 720mVp-p (H)
③ Y/C 1.8Vp-p (H)	⑬ 3.4Vp-p (148.7MHz)	㉓ Y/C 950mVp-p (H)	㉝ 5.0Vp-p (V)	㊸ YUV 3.2Vp-p (V)	㊿③ Y/C 3.9Vp-p (V)	⑥③ Y/C 600mVp-p (H)
④ 4.6Vp-p (V)	⑭ 3.8Vp-p (78MHz)	㉔ YUV 3.3Vp-p (H)	㉞ 5.0Vp-p (H)	㊹ YUV 3.2Vp-p (H)	㊿④ Y/C 4.9Vp-p (H)	
⑤ 4.8Vp-p (H)	⑮ 4.4Vp-p (3.6MHz)	㉕ YUV 3.3Vp-p (H)	㉟ 4.8Vp-p (H)	㊺ YUV 700mVp-p (H)	㊿⑤ Y/C 4.9Vp-p (H)	
⑥ YUV 880mVp-p (H)	⑯ LINE 960mVp-p (H)	㉖ YUV 3.3Vp-p (H)	㊱ YUV 740mVp-p (H)	㊻ YUV 700mVp-p (H)	㊿⑥ Y/C 4.9Vp-p (V)	
⑦ YUV 600mVp-p (H)	⑰ LINE 560mVp-p (H)	㉗ YUV 800mVp-p (H)	㊲ YUV 700mVp-p (H)	㊼ YUV 840mVp-p (H)	㊿⑦ Y/C 4.2Vp-p (V)	
⑧ YUV 740mVp-p (H)	⑱ LINE 500mVp-p (H)	㉘ YUV 760mVp-p (H)	㊳ YUV 1.2Vp-p (H)	㊽ YUV 2.2Vp-p (V)	㊿⑧ Y/C 1.3Vp-p (H)	
⑨ 580mVp-p (H)	⑲ LINE 4.7Vp-p (14.285MHz)	㉙ YUV 600mVp-p (H)	㊴ YUV 980mVp-p (H)	㊾ YUV 3.3Vp-p (H)	㊿⑨ Y/C 800mVp-p (H)	
⑩ 800mVp-p (H)	⑳ SECAM 1Vp-p (2H)	㉚ YUV 640mVp-p (H)	㊵ YUV 1.2Vp-p (H)	㊿ YUV 4.6Vp-p (13.3MHz)	⑥⓪ Y/C 680mVp-p (H)	

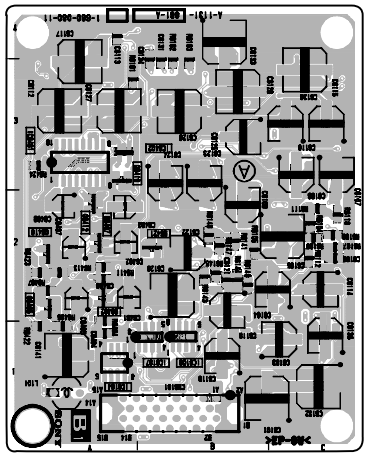

B1 -A SIDE-
SUFFIX: -11

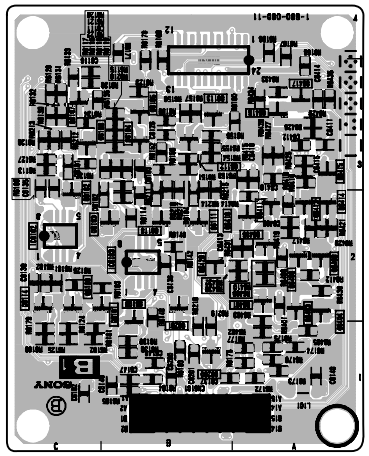

B1 -B SIDE-
SUFFIX: -11

B1 BOARD

* : B SIDE

D6101	*C-3
D6102	*C-2
D6103	*B-3
D6104	*B-2
IC6016	B-1
IC6017	B-1
IC6102	*C-2
IC6103	*B-2
IC6104	B-1
IC6401	A-3
IC6402	B-3
Q6101	*C-2
Q6102	*C-3
Q6103	*C-2
Q6104	*B-3
Q6105	*B-3
Q6106	*C-2
Q6107	*C-3
Q6108	*C-3
Q6109	*B-2
Q6110	*B-2
Q6111	*B-2
Q6112	*B-3
Q6113	*B-3
Q6114	*C-2
Q6200	*B-1
Q6201	*B-2
Q6401	*A-2
Q6402	A-2
Q6403	*A-2
Q6404	*A-2
Q6405	A-2
Q6406	*A-2
Q6407	A-2
Q6408	*A-2
Q6409	*A-2
Q6410	A-2
Q6411	*A-2
Q6412	A-2
Q6413	*A-2
Q6414	*A-2
Q6415	*A-3
Q6416	*A-3
Q6417	*A-3
Q6418	*B-2
Q6419	A-3
Q6420	*B-2
Q6421	B-2

BA10358 (IC6104)

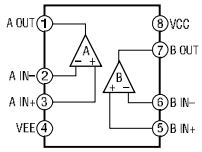

BA7657F (IC6101)

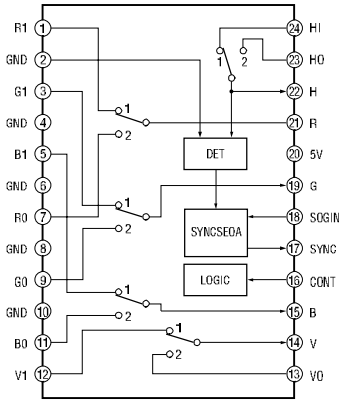

TC4W66F (IC6106, IC6107)

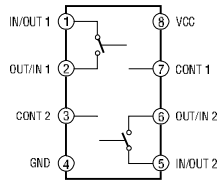

TC74HC123AF (IC6401)

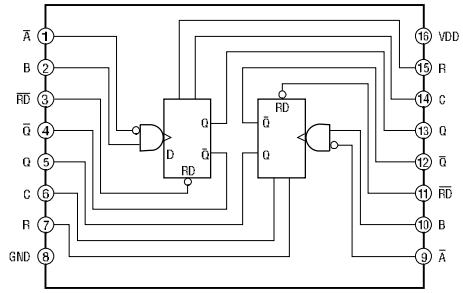

TL026CPS (IC6102, IC6103)

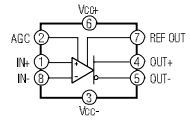

B1 Board Waveforms

① Y/C 600mVp-p (H)	② Y/C 680mVp-p (H)	③ Y/C 580mVp-p (H)	④ Y/C 400mVp-p (H)
⑤ Y/C 680mVp-p (H)	⑥ Y/C 420mVp-p (H)	⑦ YUV 4.8Vp-p (H)	⑧ Y/C 1.2Vp-p (H)

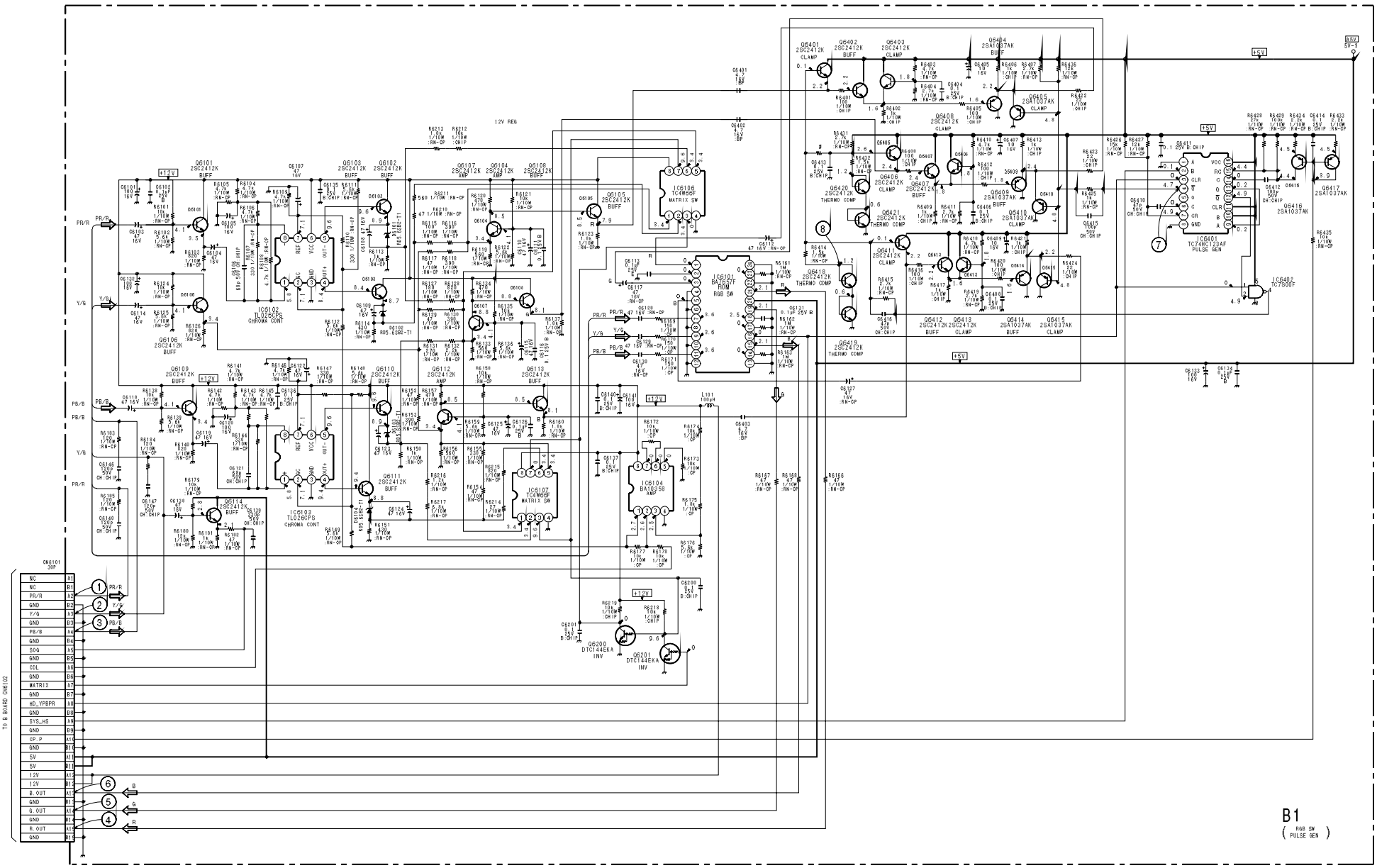
B1
(RGB SW
PULSE GEN)
B-SS9704-B1-J

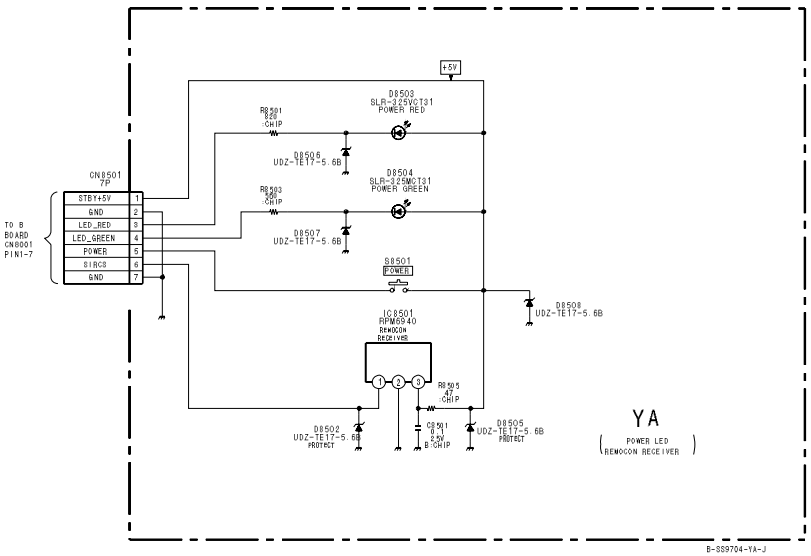

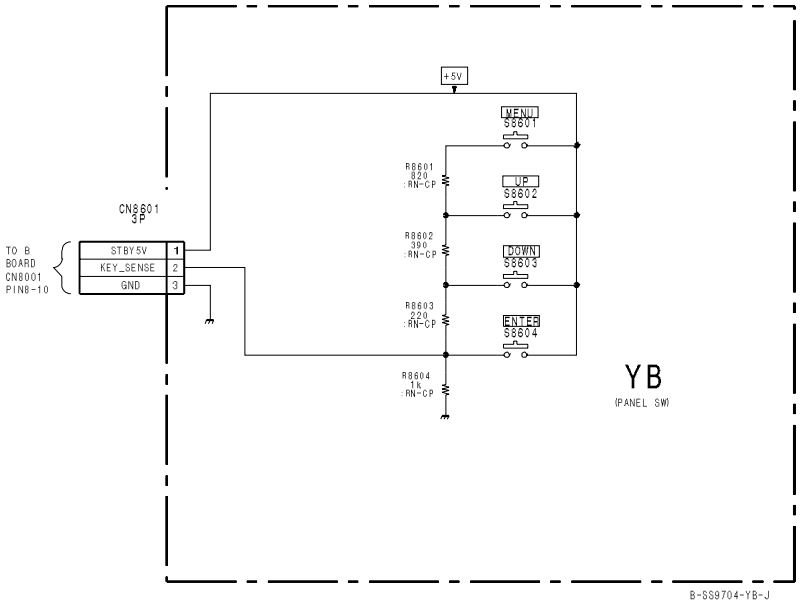

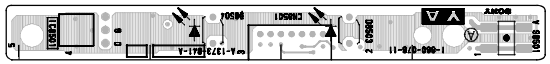

YA -A SIDE-
SUFFIX: -11

YA -B SIDE-
SUFFIX: -11

YB -A SIDE-
SUFFIX: -11

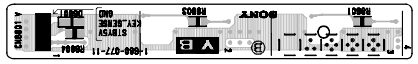

YB -B SIDE-
SUFFIX: -11

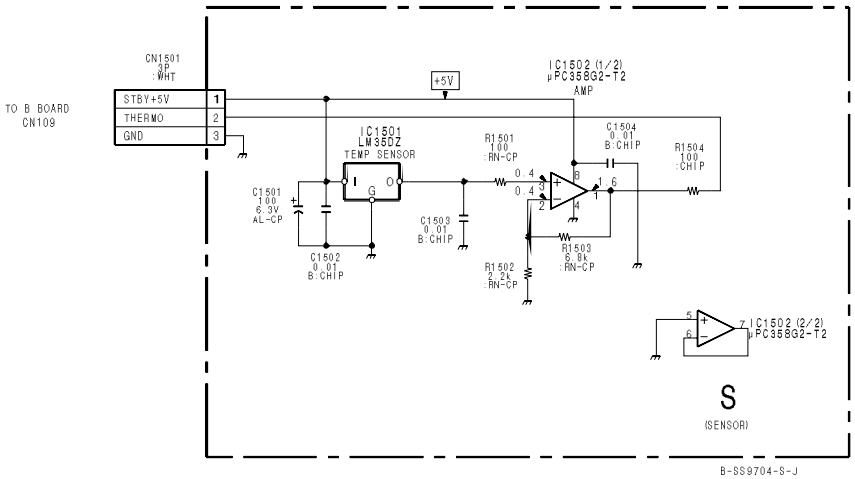

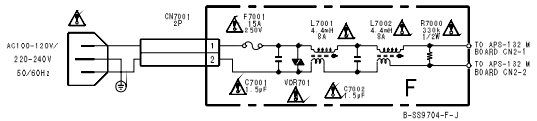

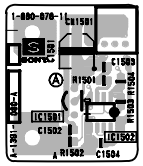

S -A SIDE-
SUFFIX: -11

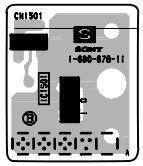

S -B SIDE-
SUFFIX: -11

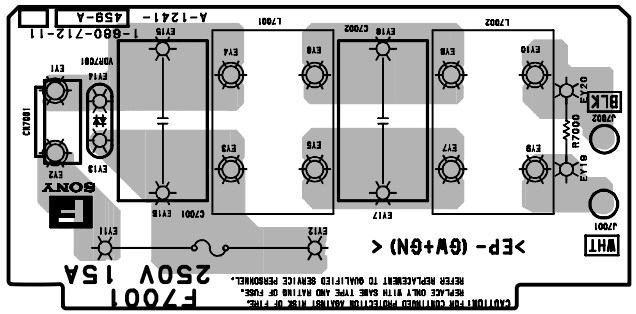

F -A SIDE-
SUFFIX: -11

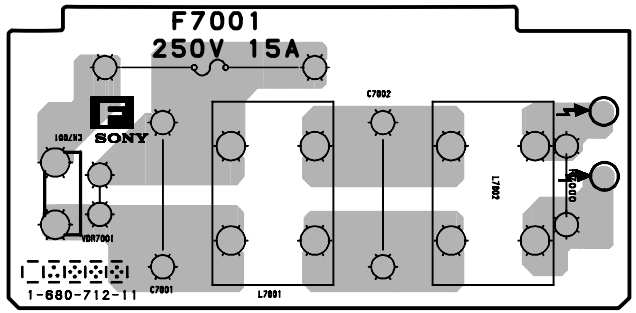

F -B SIDE-
SUFFIX: -11

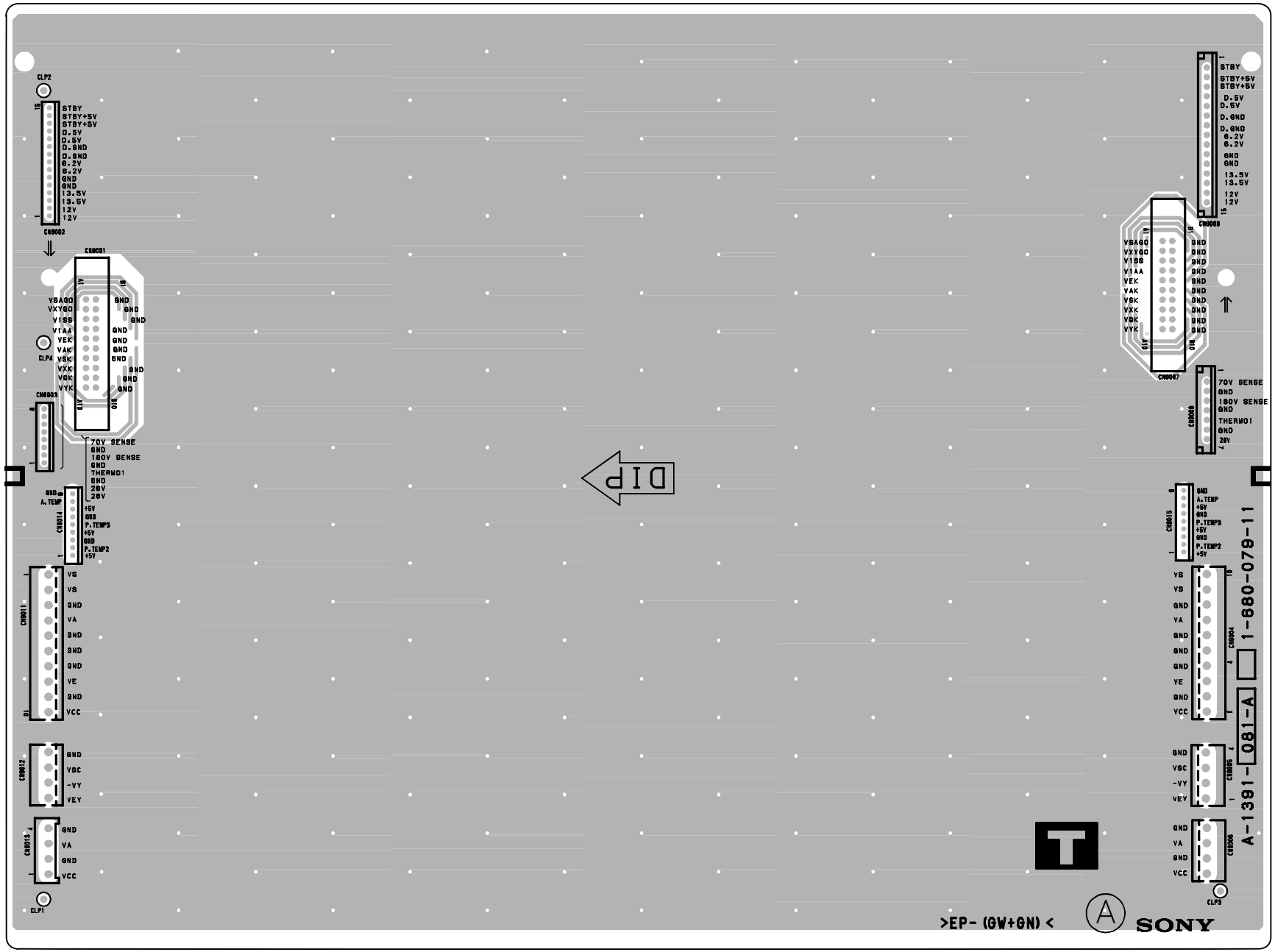

T -A SIDE-
SUFFIX: -11

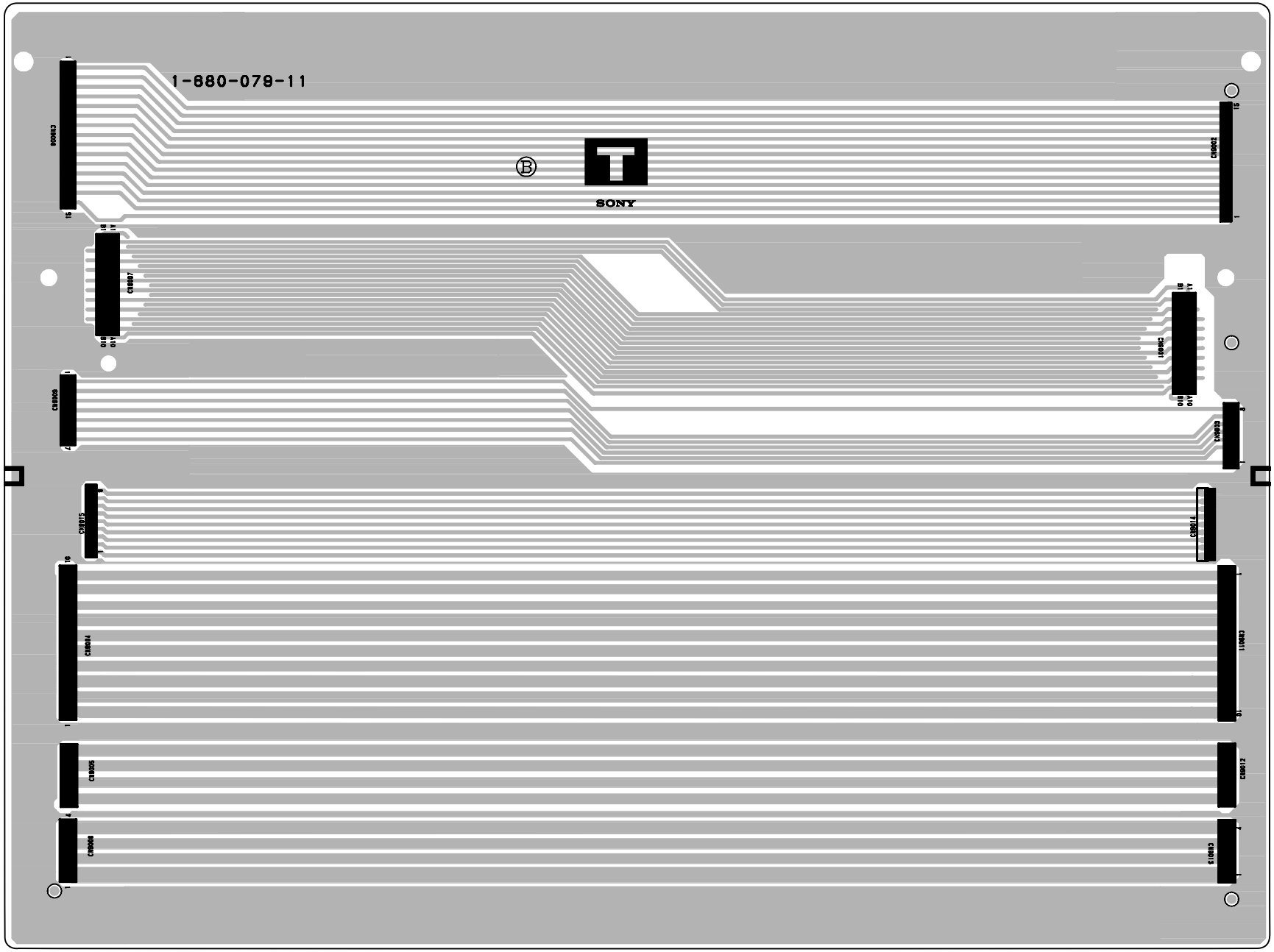

B -B SIDE-
SUFFIX: -11

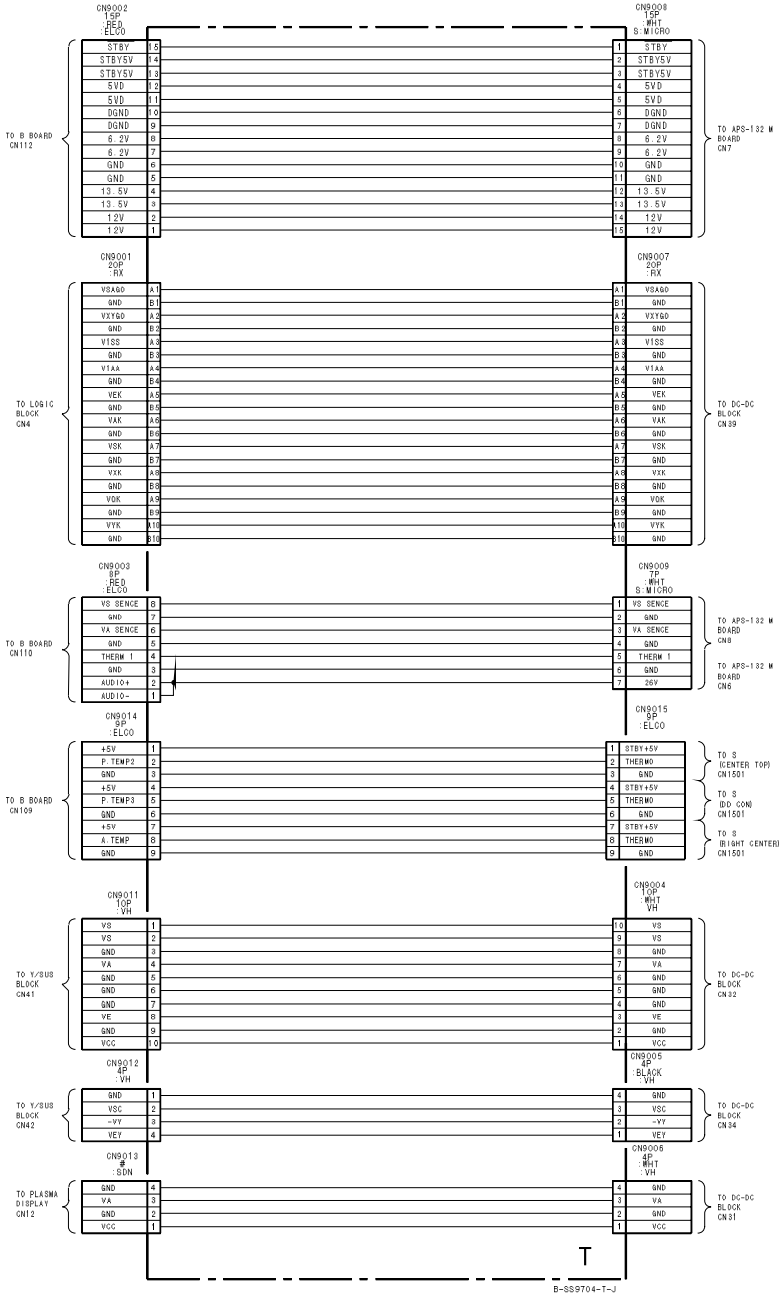
CN9002
15P
:RED
:ELCO
STBY 15
STBY5V 14
STBY5V 13
5VD 12
5VD 11
DGND 10
DGND 9
6.2V 8
6.2V 7
GND 6
GND 5
13.5V 4
13.5V 3
12V 2
12V 1
TO B BOARD CN112
CN9008
15P
:WHT
S:MICRO
1 STBY
2 STBY5V
3 STBY5V
4 5VD
5 5VD
6 DGND
7 DGND
8 6.2V
9 6.2V
10 GND
11 GND
12 13.5V
13 13.5V
14 12V
15 12V
TO APS-132 M BOARD CN7
CN9001
20P
:RX
VSAGD A1
GND B1
VXYGD A2
GND B2
VISS A3
GND B3
VIAA A4
GND B4
VEK A5
GND B5
VAK A6
GND B6
VSK A7
GND B7
VXK A8
GND B8
VOK A9
GND B9
VYK A10
GND B10
TO LOGIC BLOCK CN4
CN9007
20P
:RX
A1 VSAGD
B1 GND
A2 VXYGD
B2 GND
A3 VISS
B3 GND
A4 VIAA
B4 GND
A5 VEK
B5 GND
A6 VAK
B6 GND
A7 VSK
B7 GND
A8 VXK
B8 GND
A9 VOK
B9 GND
A10 VYK
B10 GND
TO DC-DC BLOCK CN39
CN9003
8P
:RED
:ELCO
VS SENCE 8
GND 7
VA SENCE 6
GND 5
THERM 1 4
GND 3
AUDIO+ 2
AUDIO- 1
TO B BOARD CN110
CN9009
7P
:WHT
S:MICRO
1 VS SENCE
2 GND
3 VA SENCE
4 GND
5 THERM 1
6 GND
7 26V
TO APS-132 M BOARD CN8
TO APS-132 M BOARD CN6
CN9014
9P
:ELCO
+5V 1
P.TEMP2 2
GND 3
+5V 4
P.TEMP3 5
GND 6
+5V 7
A.TEMP 8
GND 9
TO B BOARD CN109
CN9015
9P
:ELCO
1 STBY+5V
2 THERMO
3 GND
4 STBY+5V
5 THERMO
6 GND
7 STBY+5V
8 THERMO
9 GND
TO S (CENTER TOP) CN1501
TO S (DD CON) CN1501
TO S (RIGHT CENTER) CN1501
CN9011
10P
:VH
VS 1
VS 2
GND 3
VA 4
GND 5
GND 6
GND 7
VE 8
GND 9
VCC 10
TO Y/SUS BLOCK CN41
CN9004
10P
:WHT
:VH
10 VS
9 VS
8 GND
7 VA
6 GND
5 GND
4 GND
3 VE
2 GND
1 VCC
TO DC-DC BLOCK CN32
CN9012
4P
:VH
GND 1
VSC 2
-VY 3
VEY 4
TO Y/SUS BLOCK CN42
CN9005
4P
:BLACK
:VH
4 GND
3 VSC
2 -VY
1 VEY
TO DC-DC BLOCK CN34
CN9013
4P
:SDN
GND 4
VA 3
GND 2
VCC 1
TO PLASMA DISPLAY CN12
CN9006
4P
:WHT
:VH
4 GND
3 VA
2 GND
1 VCC
TO DC-DC BLOCK CN31
T
B-SS9704-T-J

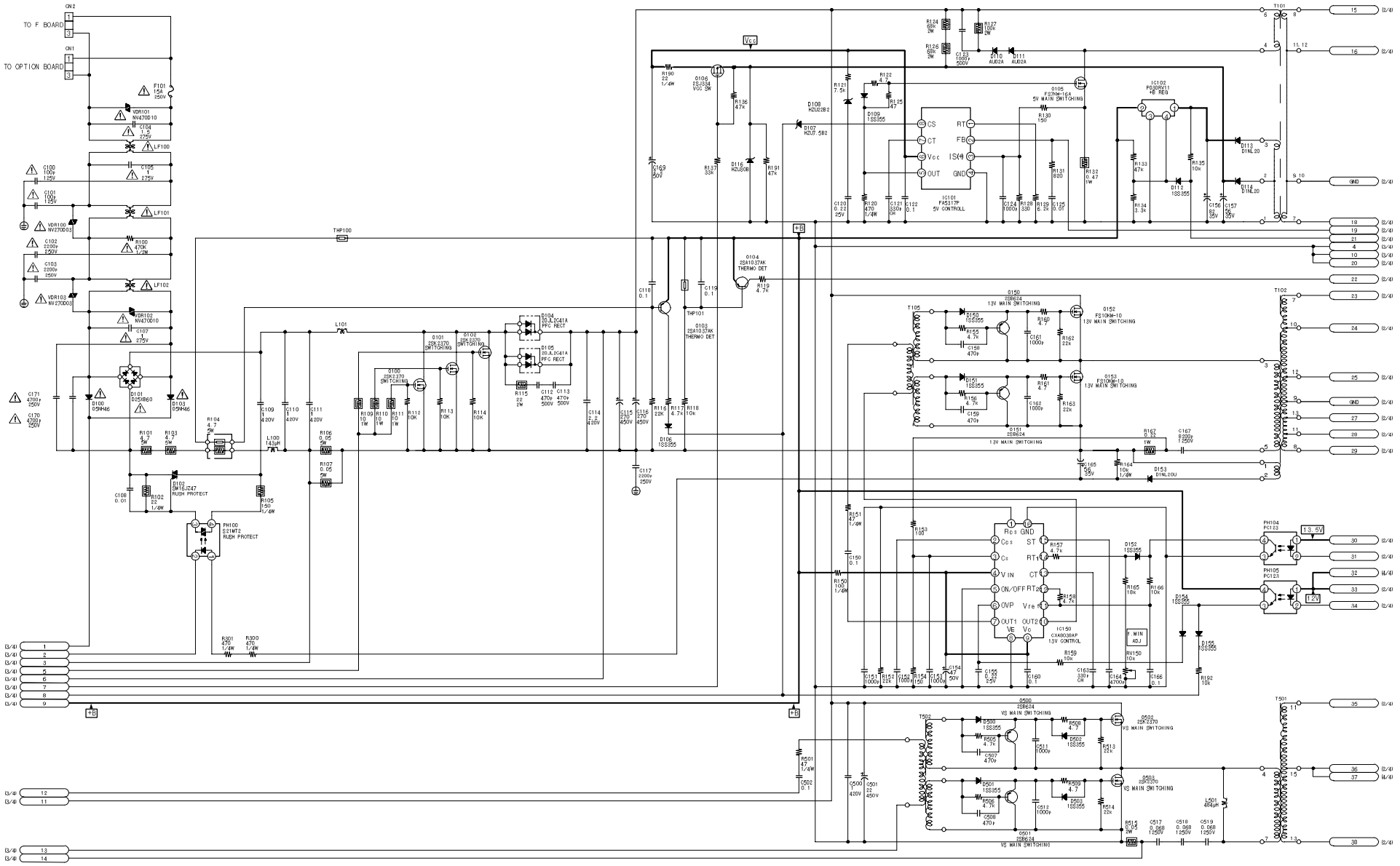

A | B | C | D | E | F | G | H

1 2 3 4 5

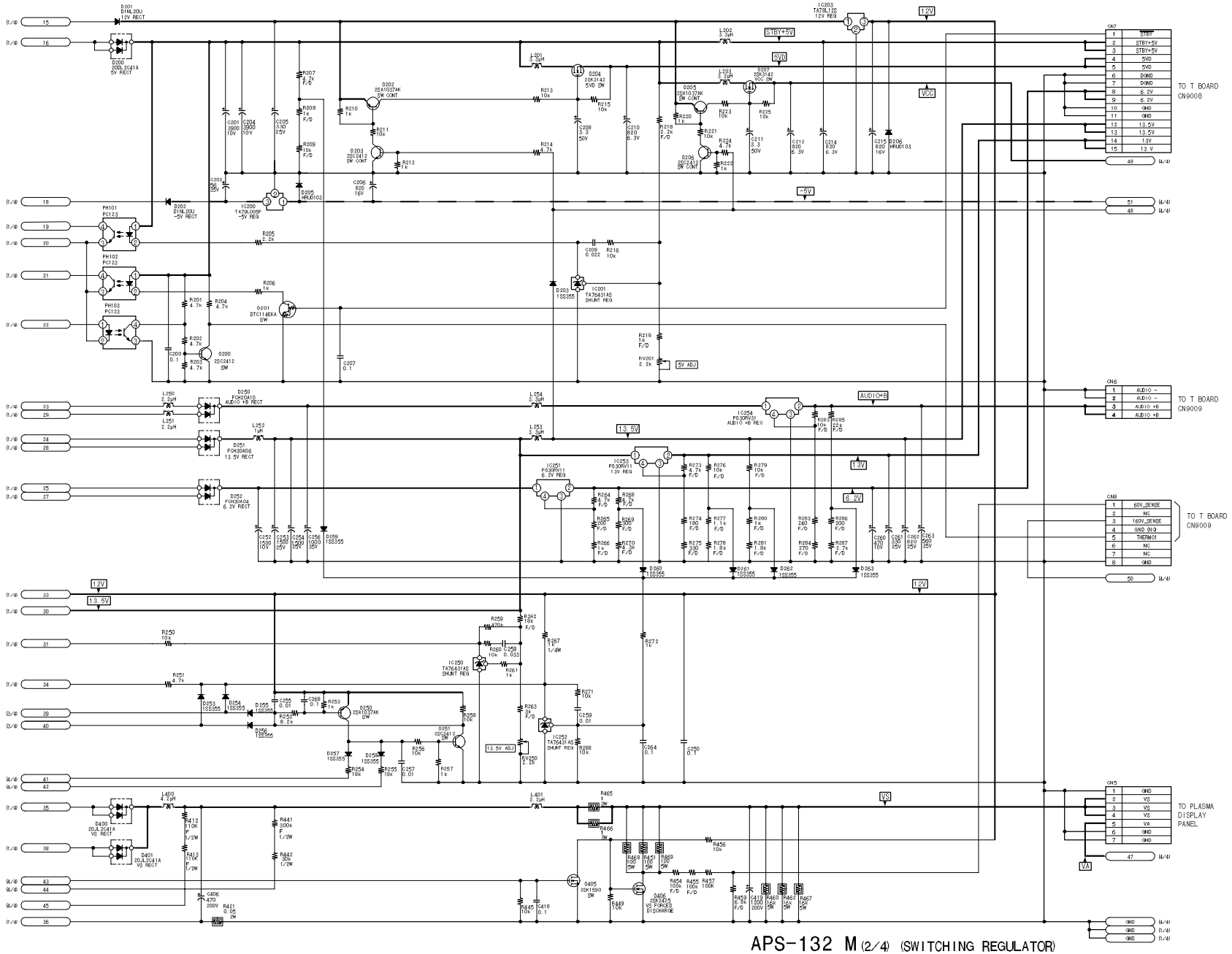

APS-132 M (2/4) (SWITCHING REGULATOR)

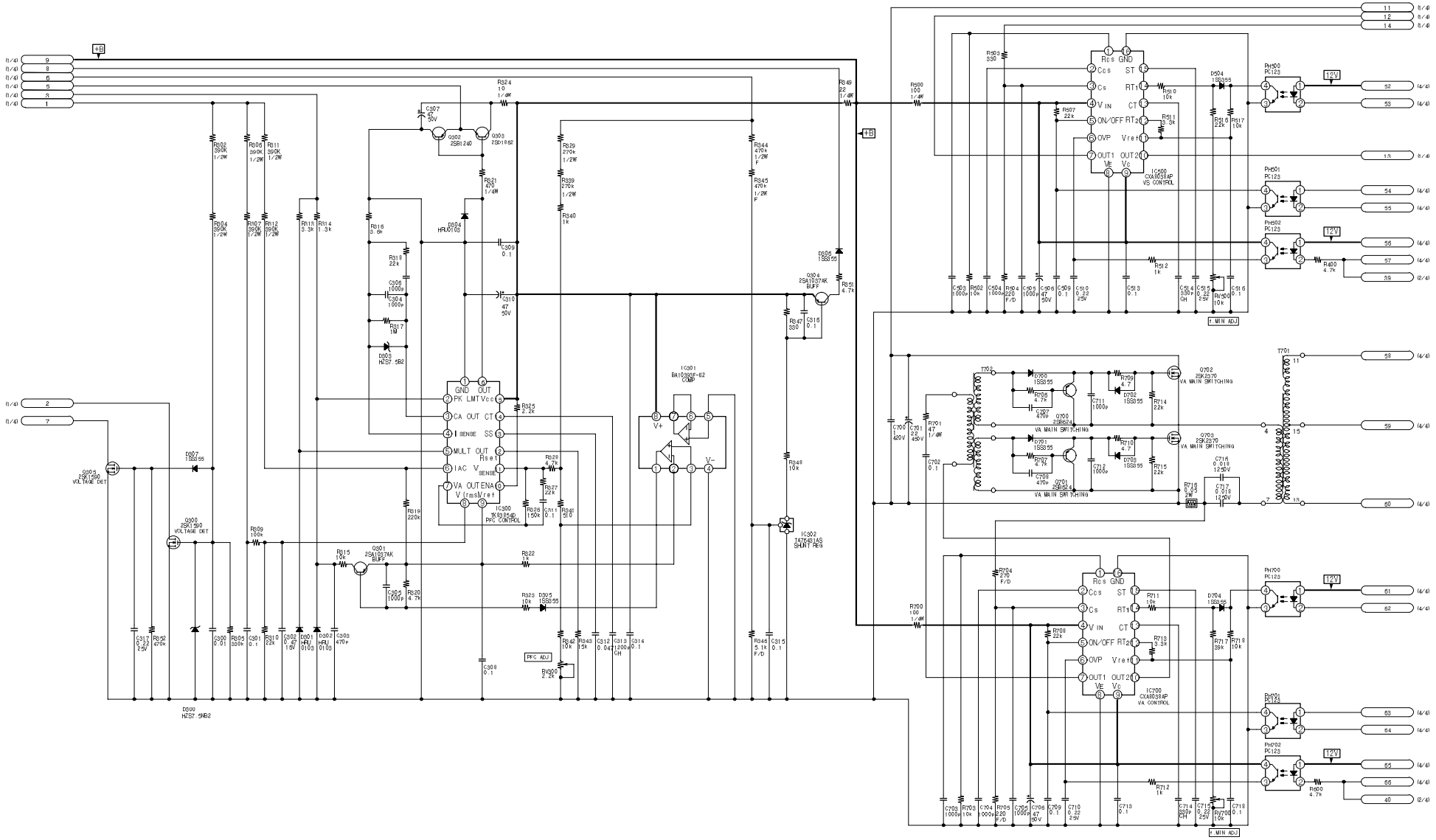

APS-132 M (3/4) (SWITCHING REGULATOR)

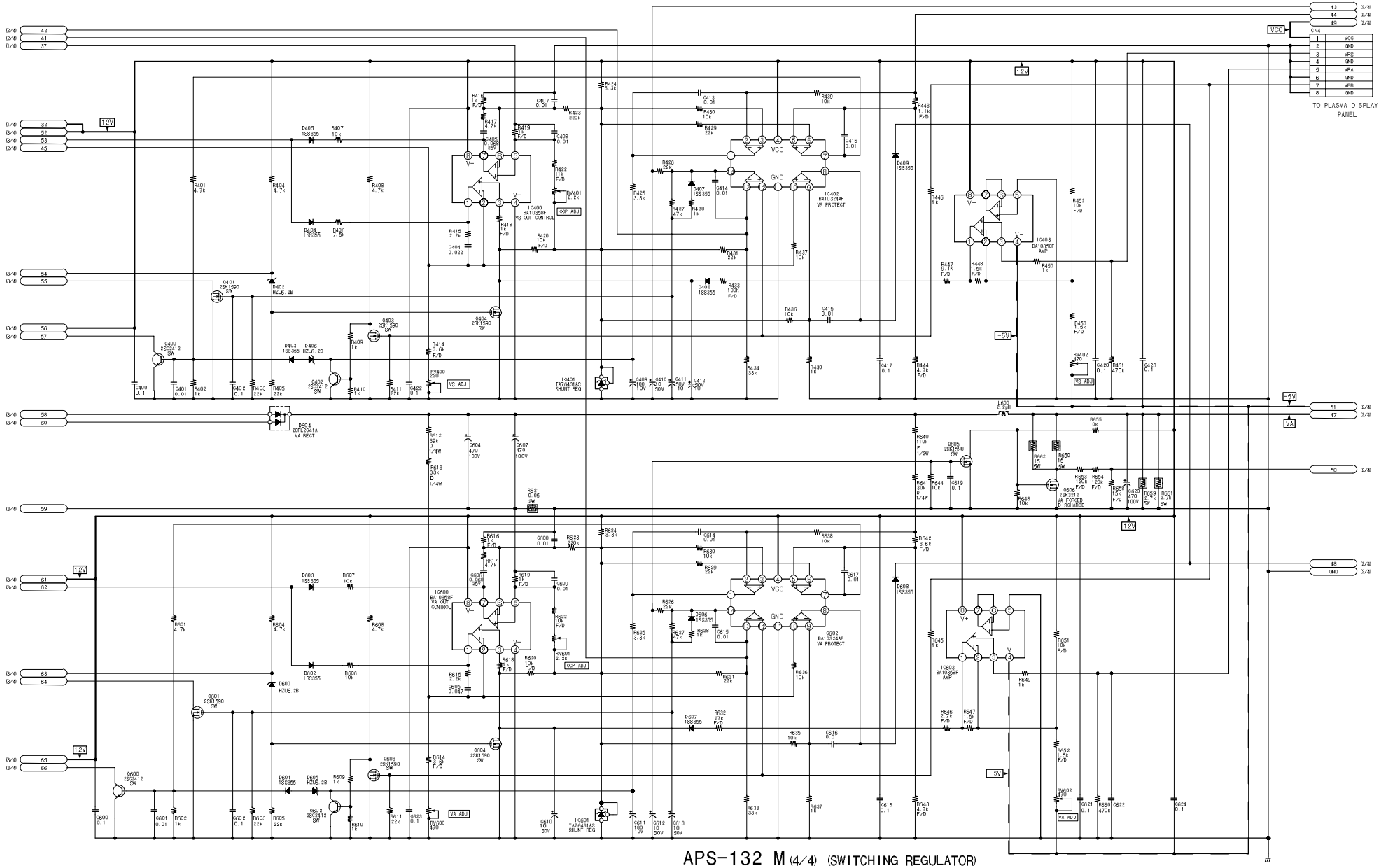

APS-132 M (4/4) (SWITCHING REGULATOR)

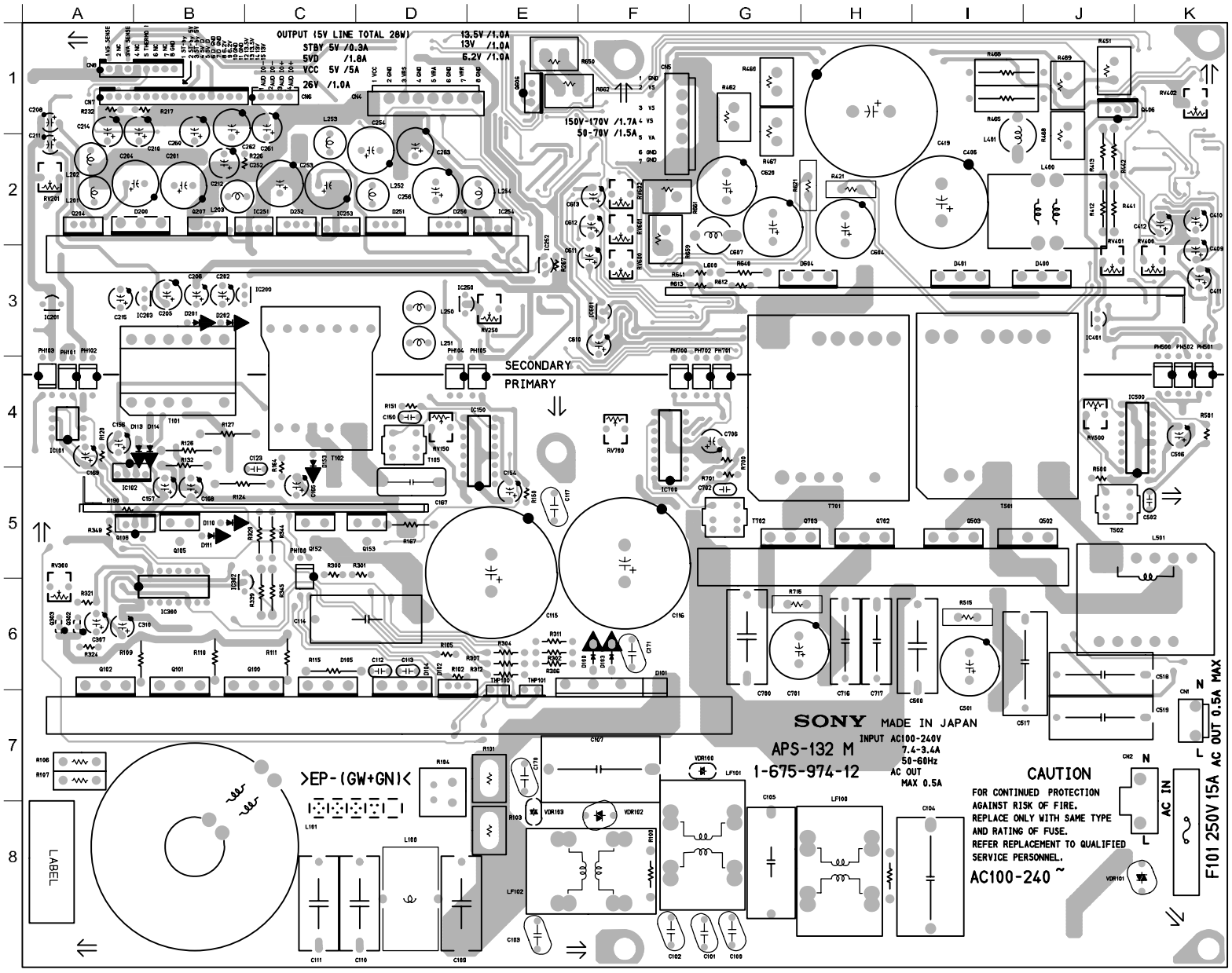

M BOARD (APS-132)

* : B SIDE

D100	F-6	IC203	B-3		
D101	F-6	IC250	D-3		
D102	D-6	IC251	C-2		
D103	F-6	IC252	E-3		
D104	D-6	IC253	C-2		
D105	C-6	IC254	E-2		
D106	* E-7	IC300	B-6		
D107	* C-5	IC301	* A-5		
D108	* A-4	IC302	B-6		
D109	* B-5	IC400	* J-3		
D110	B-5	IC401	J-3		
D111	B-5	IC402	* K-2		
D112	* A-5	IC403	* K-1		
D113	B-4	IC500	K-4		
D114	B-4	IC600	* F-3		
D115	* B-4	IC601	F-3		
D116	* B-5	IC602	* E-2		
D150	* C-5	IC603	* E-3		
D151	* C-5	IC700	F-4		
D152	* D-4				
D153	C-4	Q100	C-6		
D154	* E-4	Q101	B-6		
D155	* E-4	Q102	A-6		
D200	B-2	Q103	* E-7		
D201	B-3	Q104	* E-7		
D202	B-3	Q105	B-5		
D203	* A-1	Q106	A-5		
D205	* B-3	Q150	* C-5		
D206	* B-3	Q151	* D-5		
D250	D-2	Q152	C-5		
D251	D-2	Q153	D-5		
D252	C-2	Q200	* A-3		
D253	* E-3	Q201	* A-2		
D254	* E-3	Q202	* A-1		
D255	* E-3	Q203	* A-1		
D256	* E-3	Q204	A-2		
D257	* E-2	Q205	* A-1		
D258	* J-2	Q206	* A-1		
D259	* B-1	Q207	B-2		
D260	* B-1	Q250	* E-3		
D261	* C-1	Q251	* E-3		
D262	* B-1	Q300	* D-6		
D263	* C-1	Q301	* A-6		
D300	* C-6	Q302	A-6		
D301	* B-6	Q303	A-6		
D302	* A-6	Q304	* B-6		
D303	* B-6	Q305	* C-5		
D304	* A-6	Q400	* K-3		
D305	* A-6	Q401	* K-3		
D306	* C-6	Q402	* K-3		
D307	* D-5	Q403	* K-2		
D400	J-3	Q404	* K-2		
D401	I-3	Q405	* J-1		
D402	* K-2	Q406	J-1		
D403	* K-3	Q500	* J-5		
D404	* K-3	Q501	* I-5		
D405	* K-3	Q502	J-5		
D406	* K-3	Q503	I-5		
D407	* K-2	Q600	* G-3		
D408	* K-1	Q601	* G-3		
D409	* K-1	Q602	* F-3		
D500	* J-5	Q603	* E-2		
D501	* I-5	Q604	* F-4		
D502	* I-5	Q605	* E-1		
D503	* I-5	Q606	* E-1		
D504	* J-4	Q700	* H-5		
D600	* E-3	Q701	* G-6		
D601	* G-3	Q702	H-5		
D602	* F-3	Q703	G-5		
D603	* F-3				
D604	H-3	RV150	D-4		
D605	* G-3	RV201	A-2		
D606	* E-2	RV250	E-3		
D607	* E-3	RV300	A-6		
D608	* E-1	RV400	K-3		
D700	* H-5	RV401	J-3		
D701	* G-5	RV402	K-1		
D702	* H-5	RV500	J-4		
D703	* H-5	RV600	F-3		
D704	* F-4	RV601	F-2		
		RV602	F-2		
IC101	A-4	RV700	F-4		
IC102	A-5				
IC150	E-4	THP100	E-6		
IC200	C-3	THP101	E-6		
IC201	A-3				

APS-132 M -A SIDE-

SUFFIX: -12

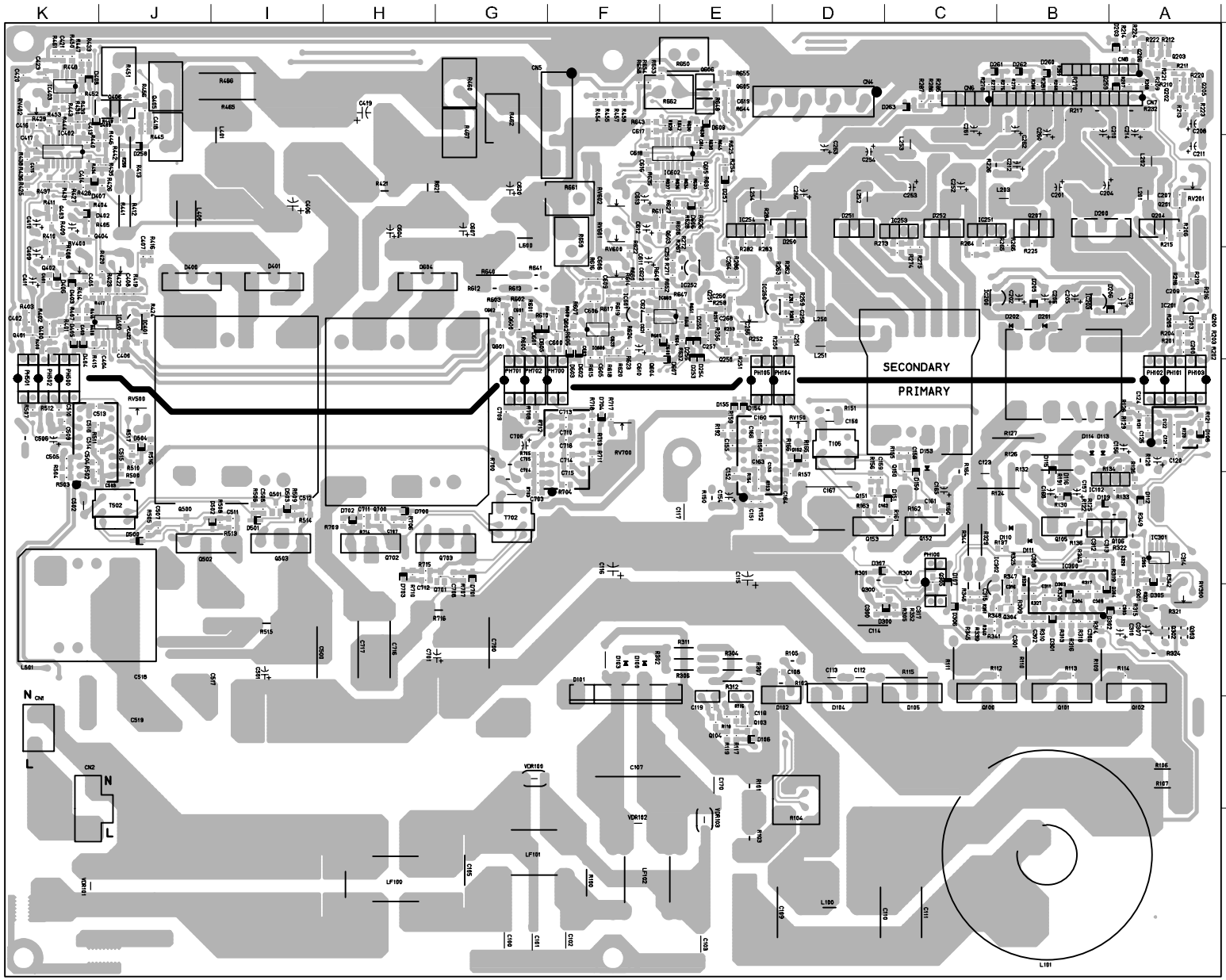

APS-132 M -B SIDE-
SUFFIX: -12

SAFETY CHECK-OUT

After correcting the original service problem, perform the following safety checks before releasing the set to the customer :

Check the metal trim, "metallized" knobs, screws, and all other exposed metal parts for AC leakage. Check leakage as described below.

LEAKAGE TEST

The AC leakage from any exposed metal part to earth ground and from all exposed metal parts to any exposed metal part having a return to chassis, must not exceed 0.5 mA. Leakage current can be measured by any one of three methods.

1. A commercial leakage tester, such as the Simpson 229 or RCA WT-540A. Follow the manufacturers' instructions to use these instruments.
2. A battery-operated AC milliammeter. The Data Precision 245 digital multimeter is suitable for this job.
3. Measuring the voltage drop across a resistor by means of a VOM or battery-operated AC voltmeter. The "limit" indication is 0.75 V, so analog meters must have an accurate low-voltage scale. The Simpson 250 and Sanwa SH-63Trd are examples of a passive VOM that is suitable. Nearly all battery operated digital multimeters that have a 2 V AC range are suitable. (See Fig. A)

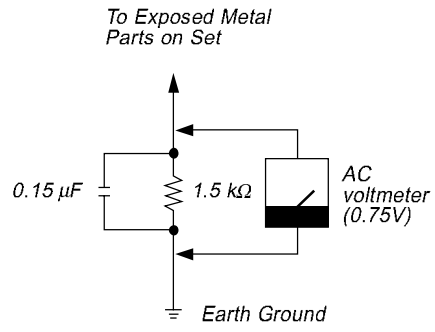

Fig A. Using an AC voltmeter to check AC leakage.